EXPLODED DRAWING A

Model No. SFEVEL13713.0 R0813A

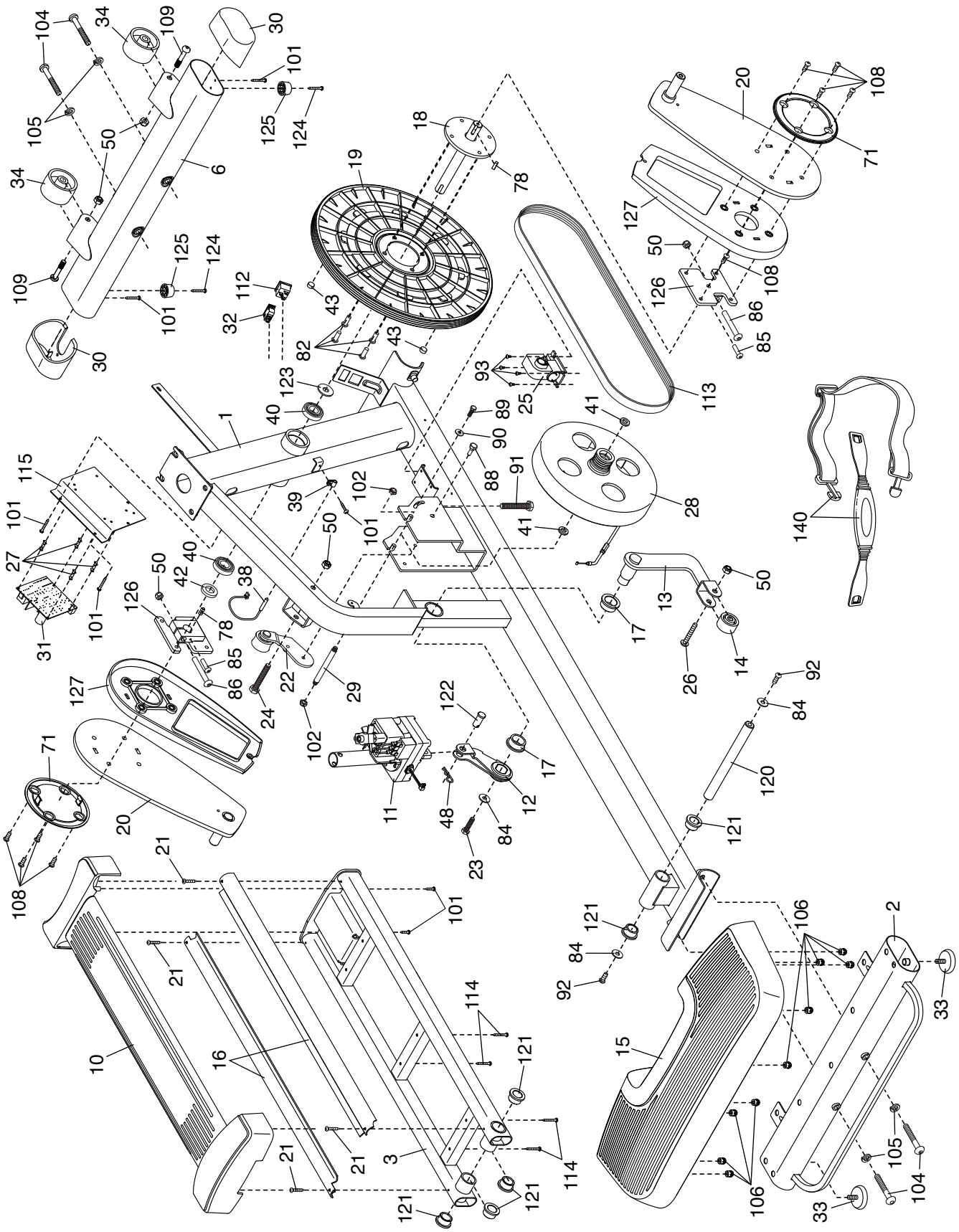

EXPLODED DRAWING B

Model No. SFEVEL13713.0 R0813A

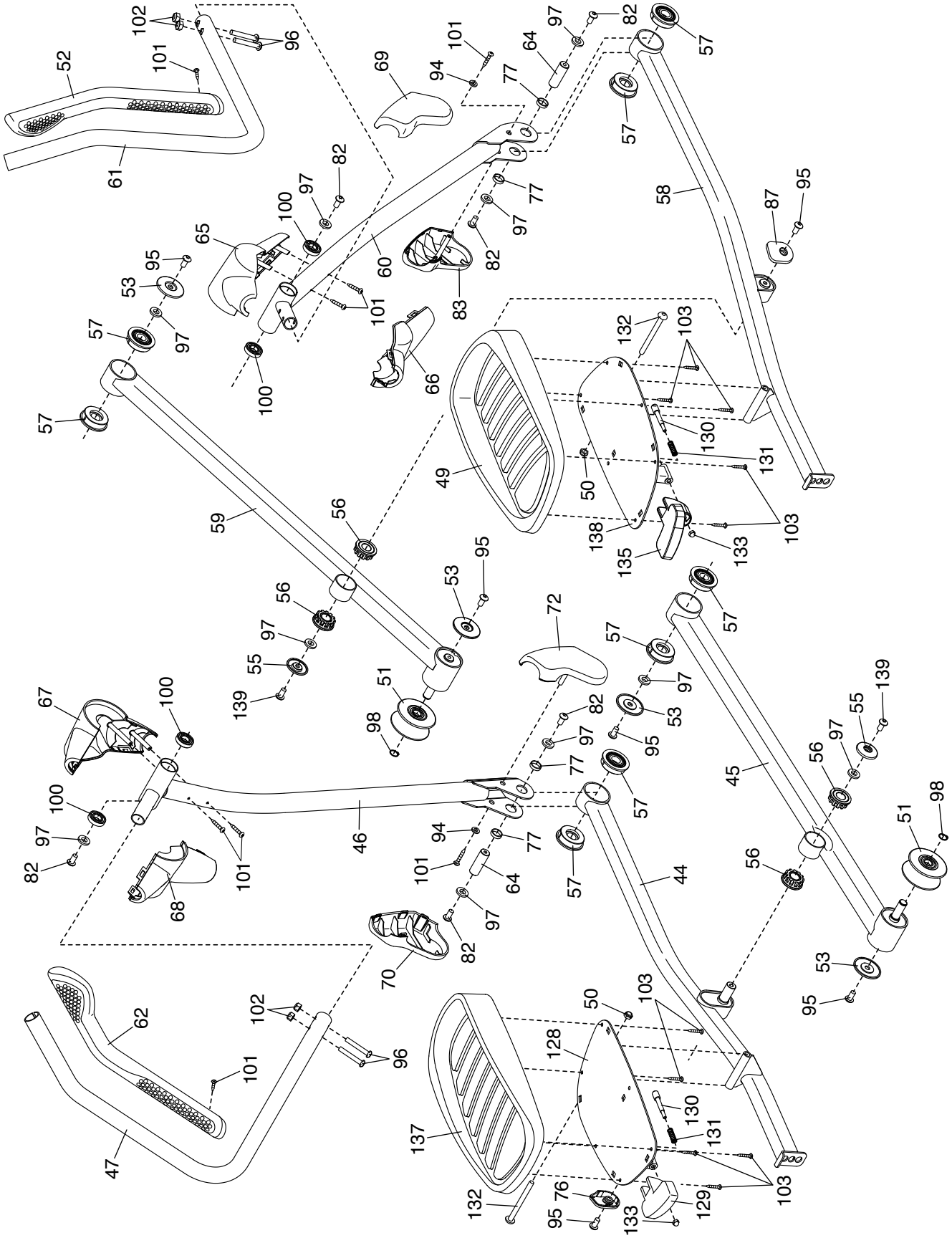

EXPLODED DRAWING C
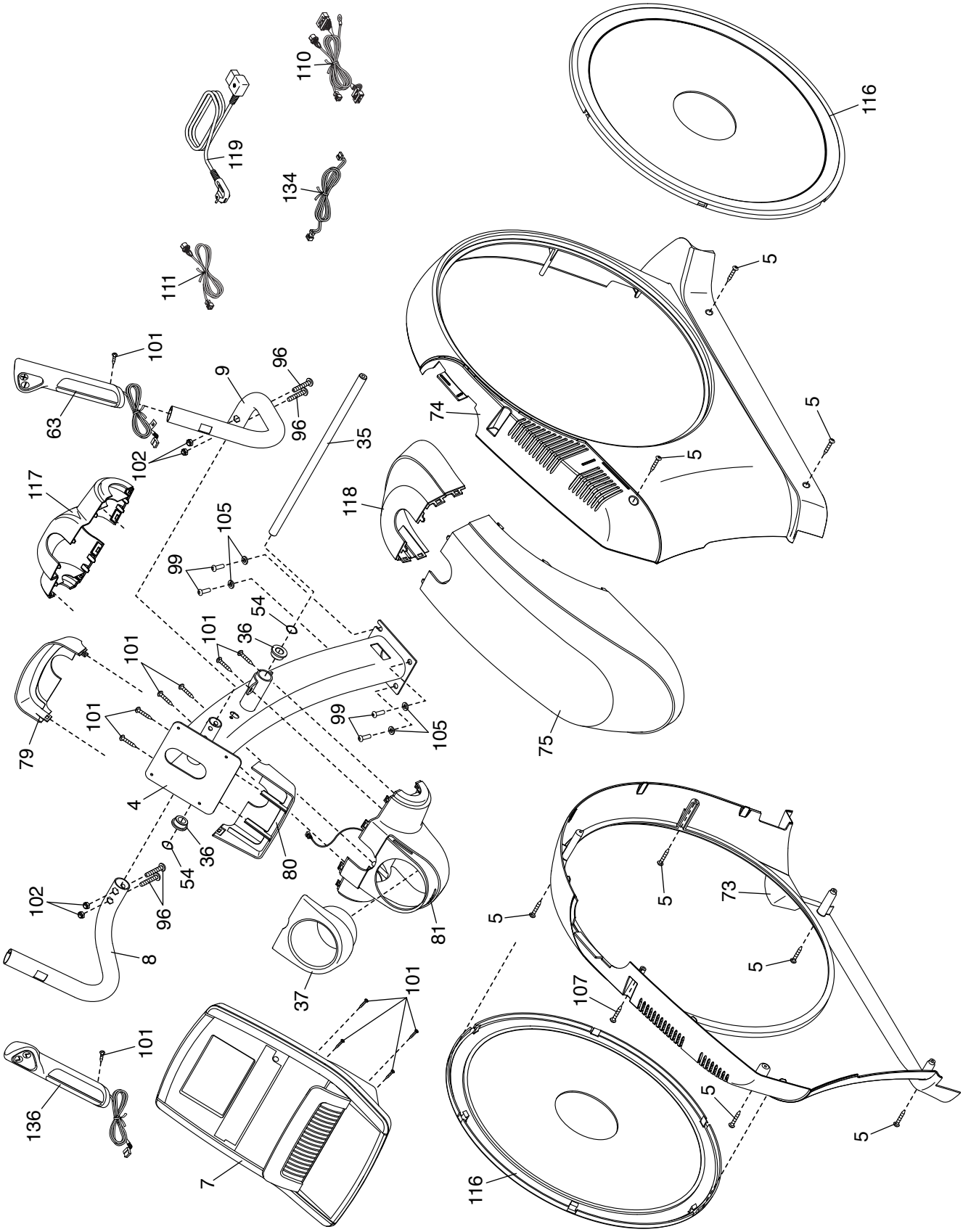
Model No. SFEVEL13713.0 R0813A