EXPLODED DRAWING
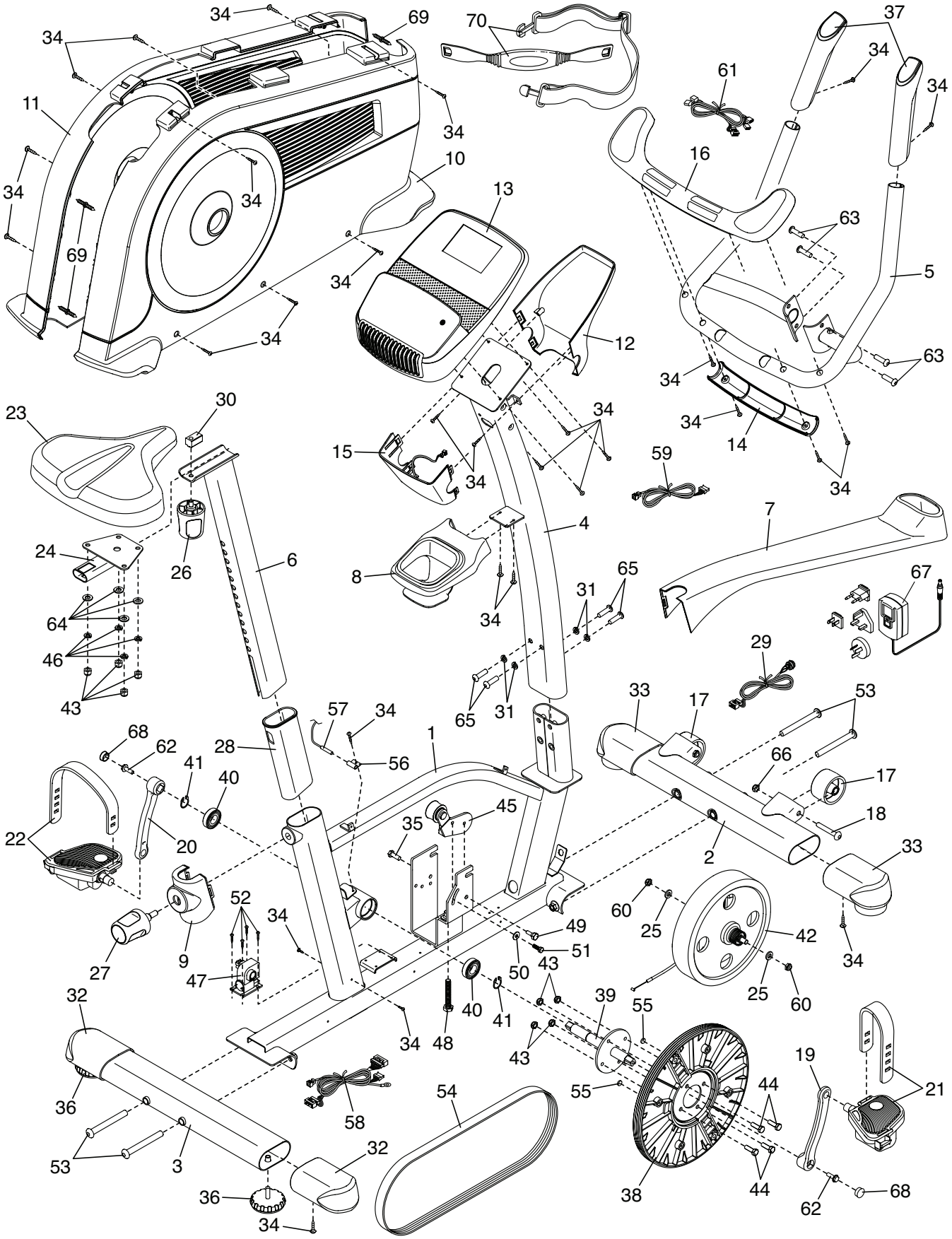
Model No. SFEVEX80713.1 R0614A