TABLE OF CONTENTS
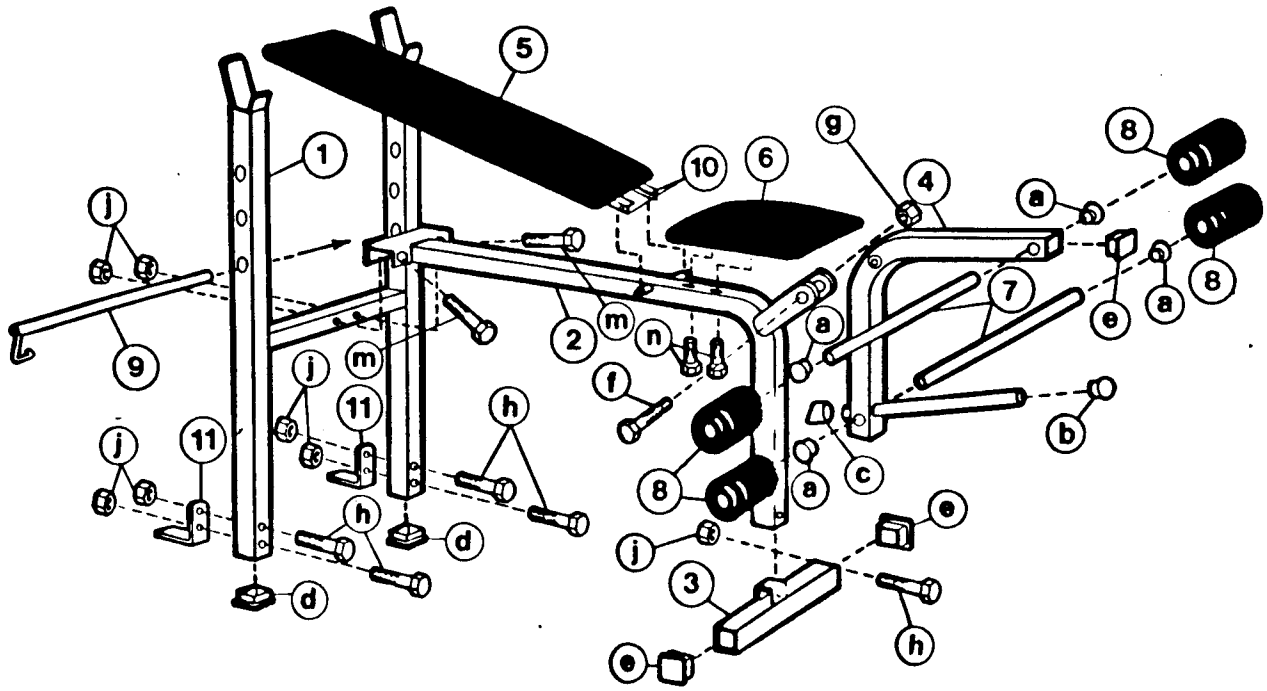
	PAGE
REPAIR PARTS AND SERVICE	2
PARTS LIST	2
STEP 1 FRAME ASSEMBLY	3
STEP 2 BACKREST PREPARATION	3
STEP 3 ATTACHING BACKREST AND SEAT	4
STEP 4 ATTACHING LEG CURL	4
DECAL LOCATION	4