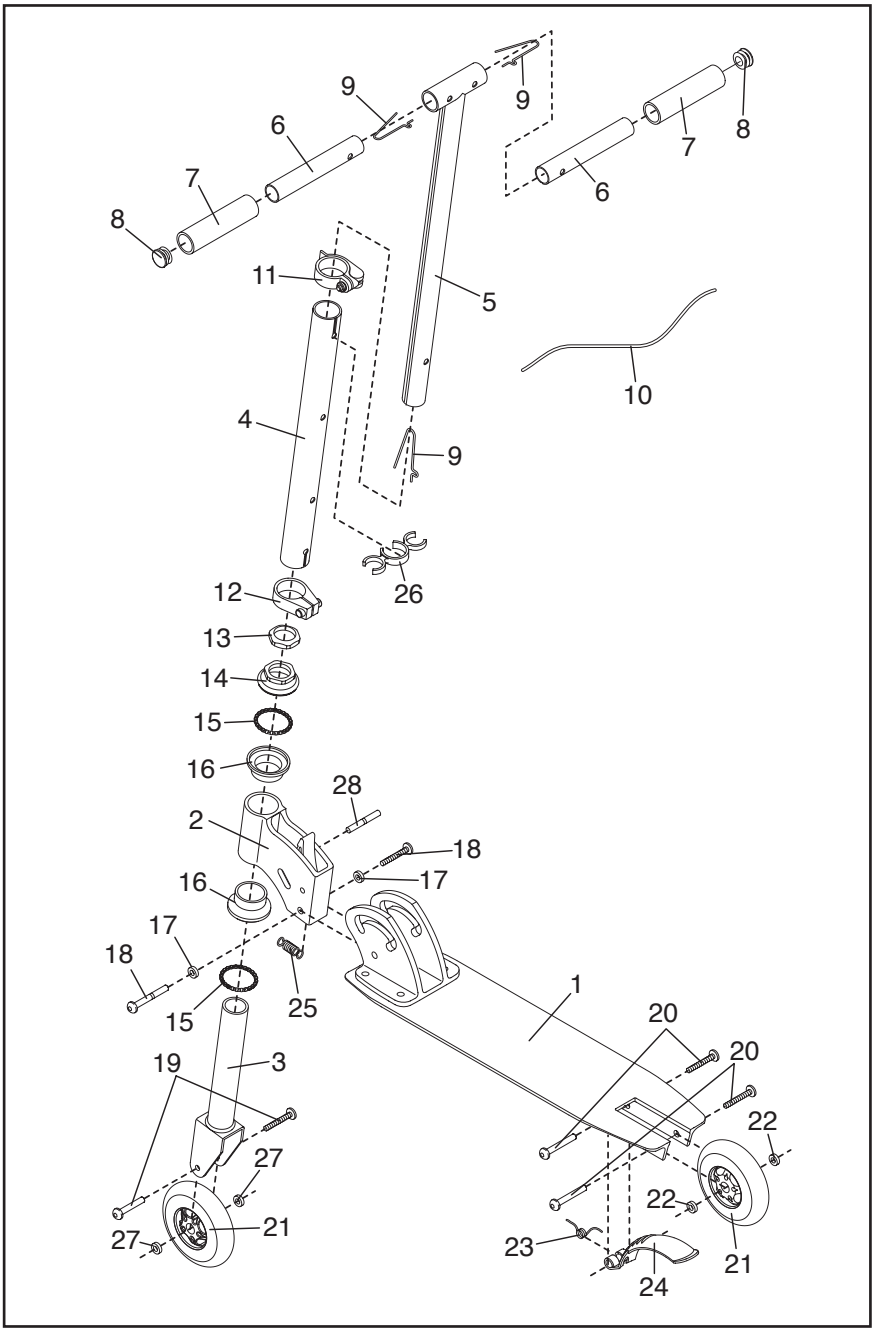Exploded Drawing—Model No. TBSC0570 R1100A