Exploded Drawing—Model No. WEBE06691
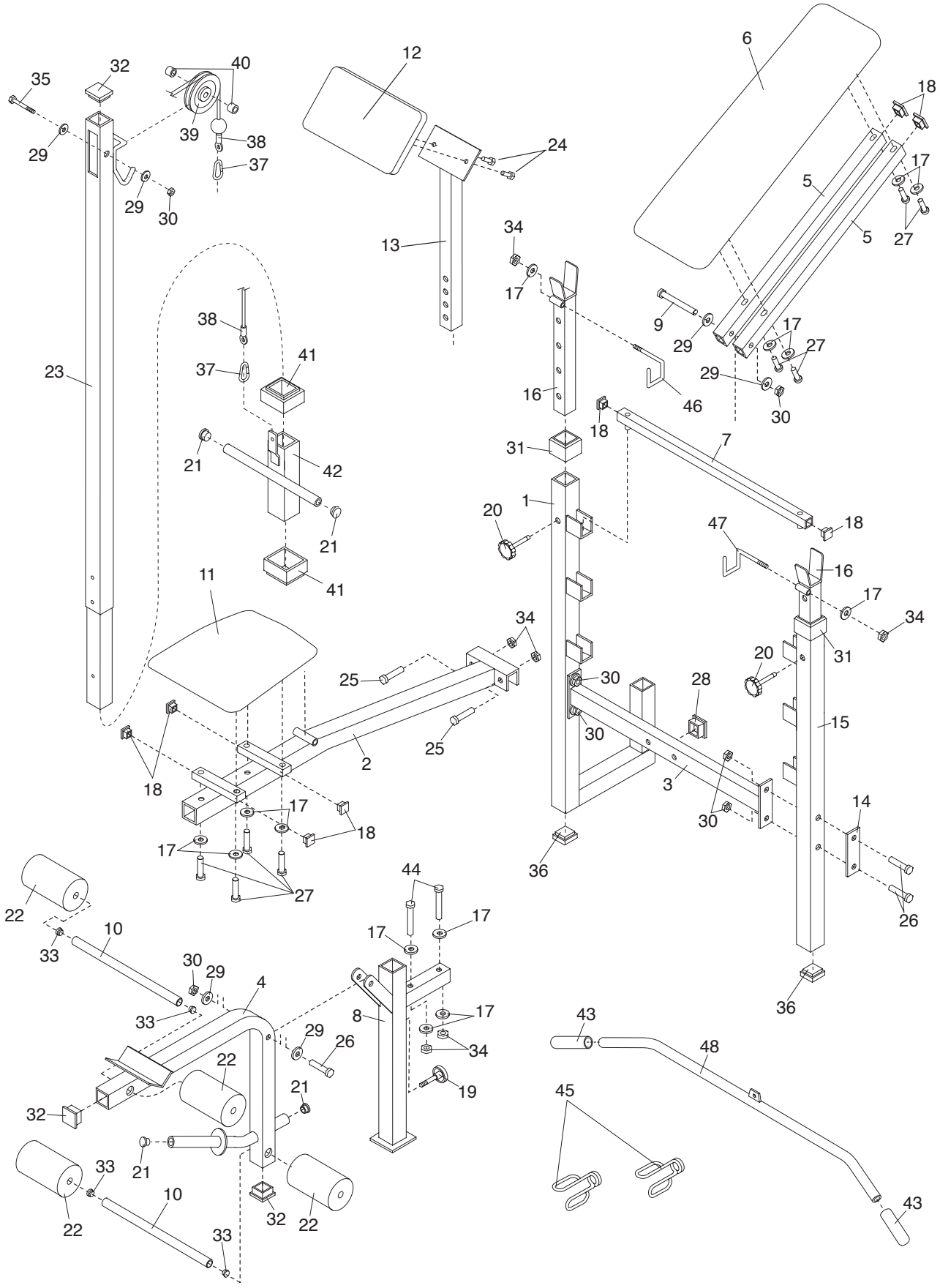
R1100A