Exploded Drawing - Model No. WEBE13871
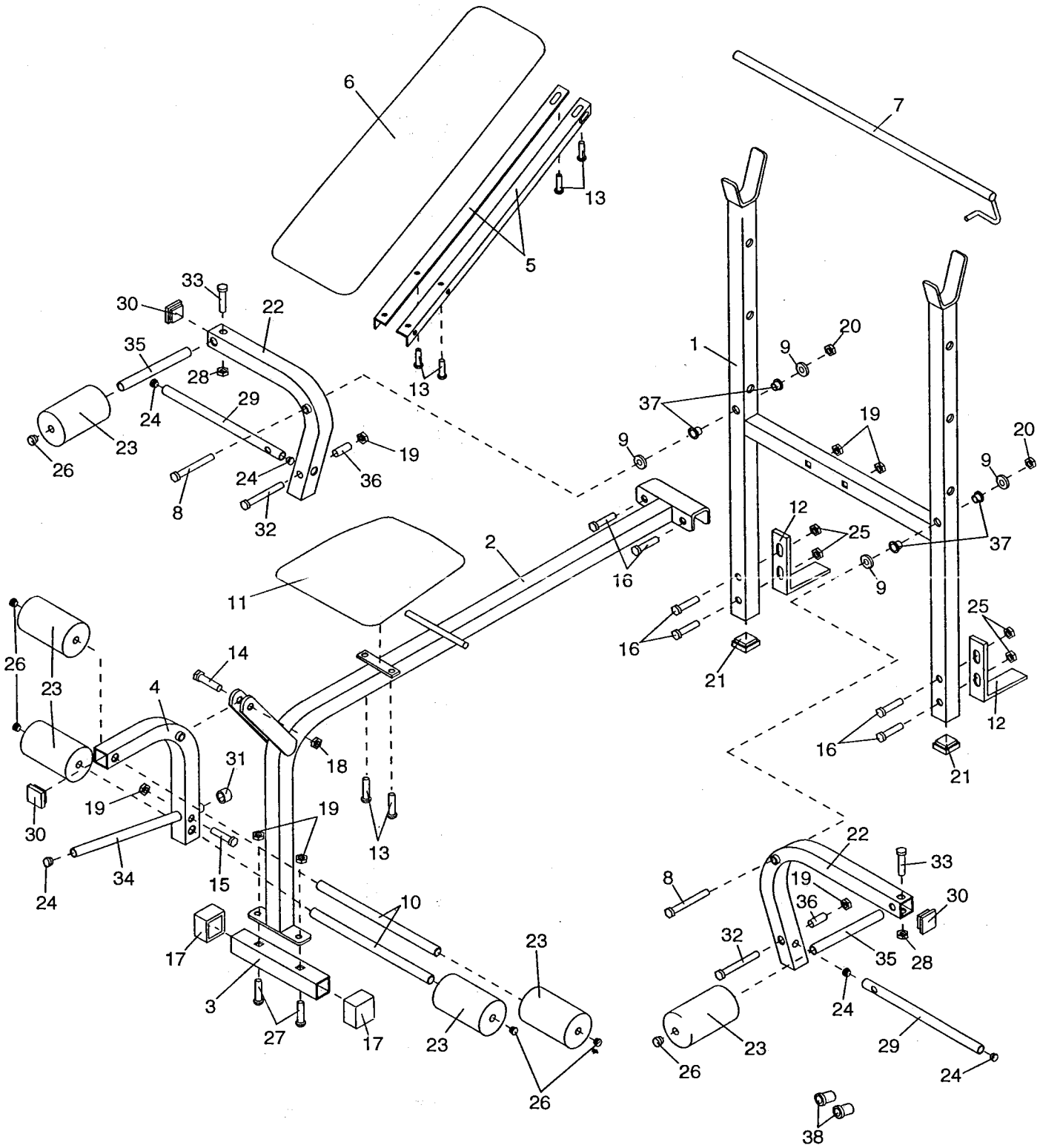
R1098A