Exploded Drawing - Model No. WEBE21580
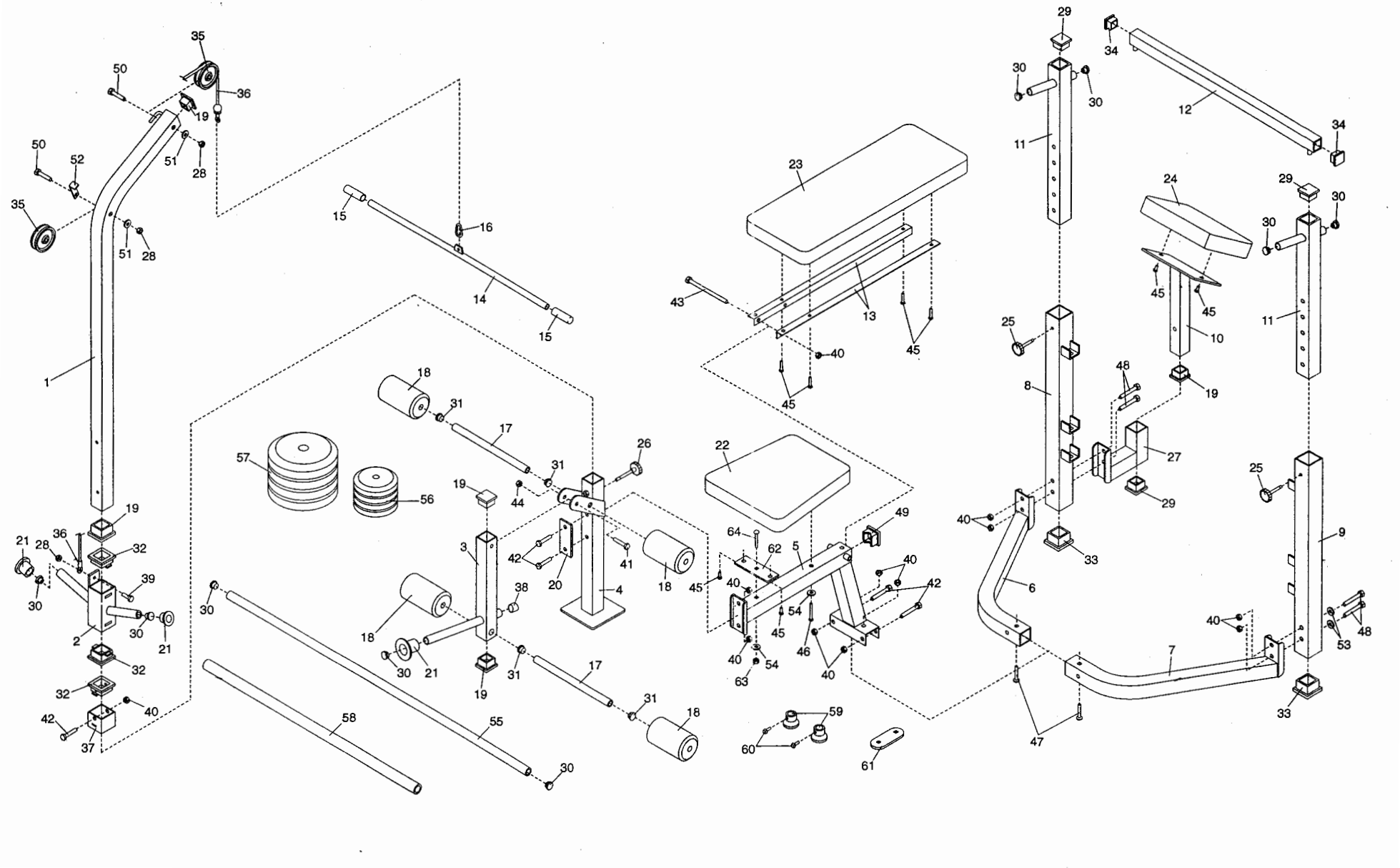
R0798A