EXPLODED DRAWING—Model No. WEST20020
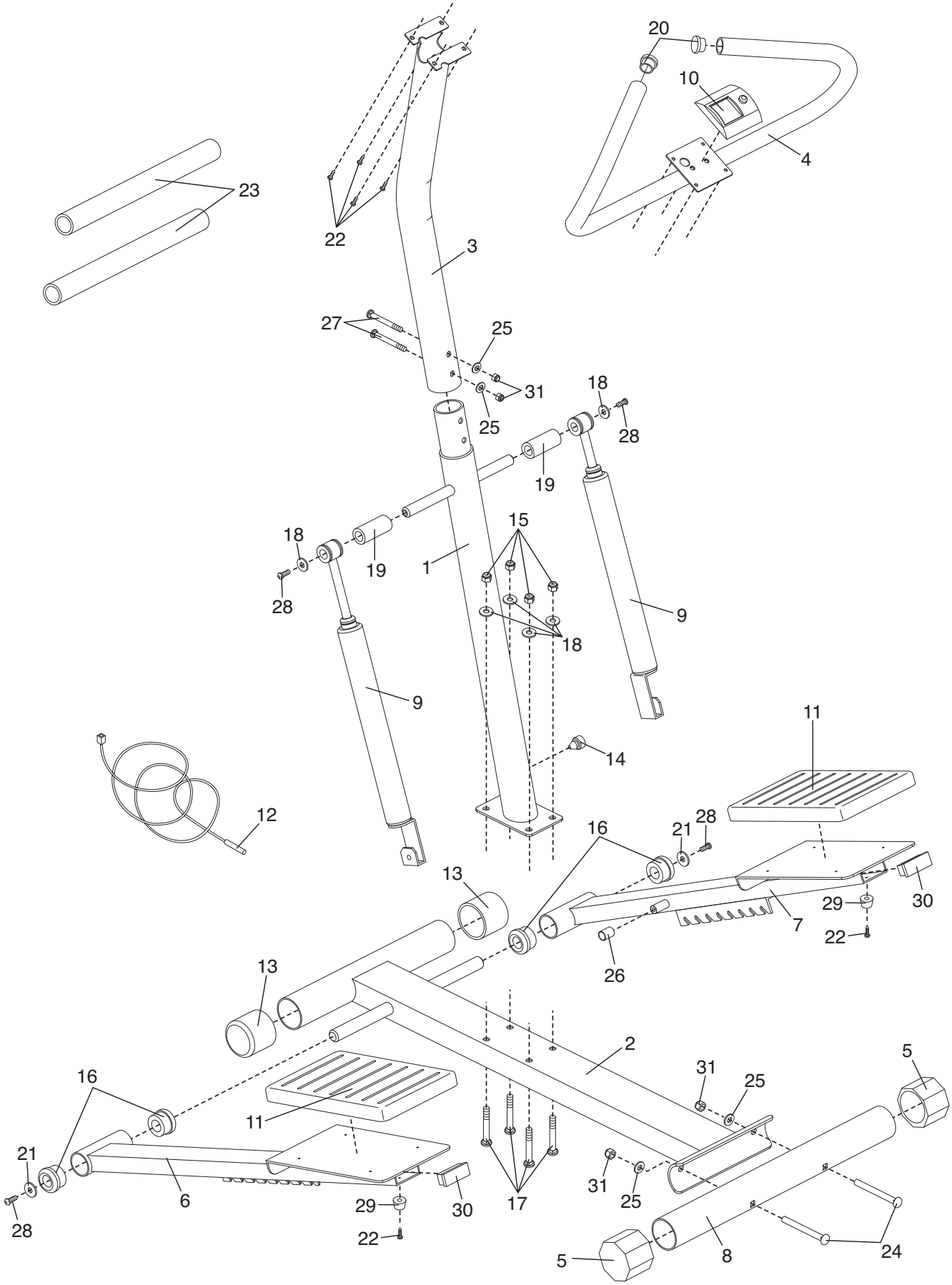
R1002A