EXPLODED DRAWING—Model No. WL745030

Rev. 8/93

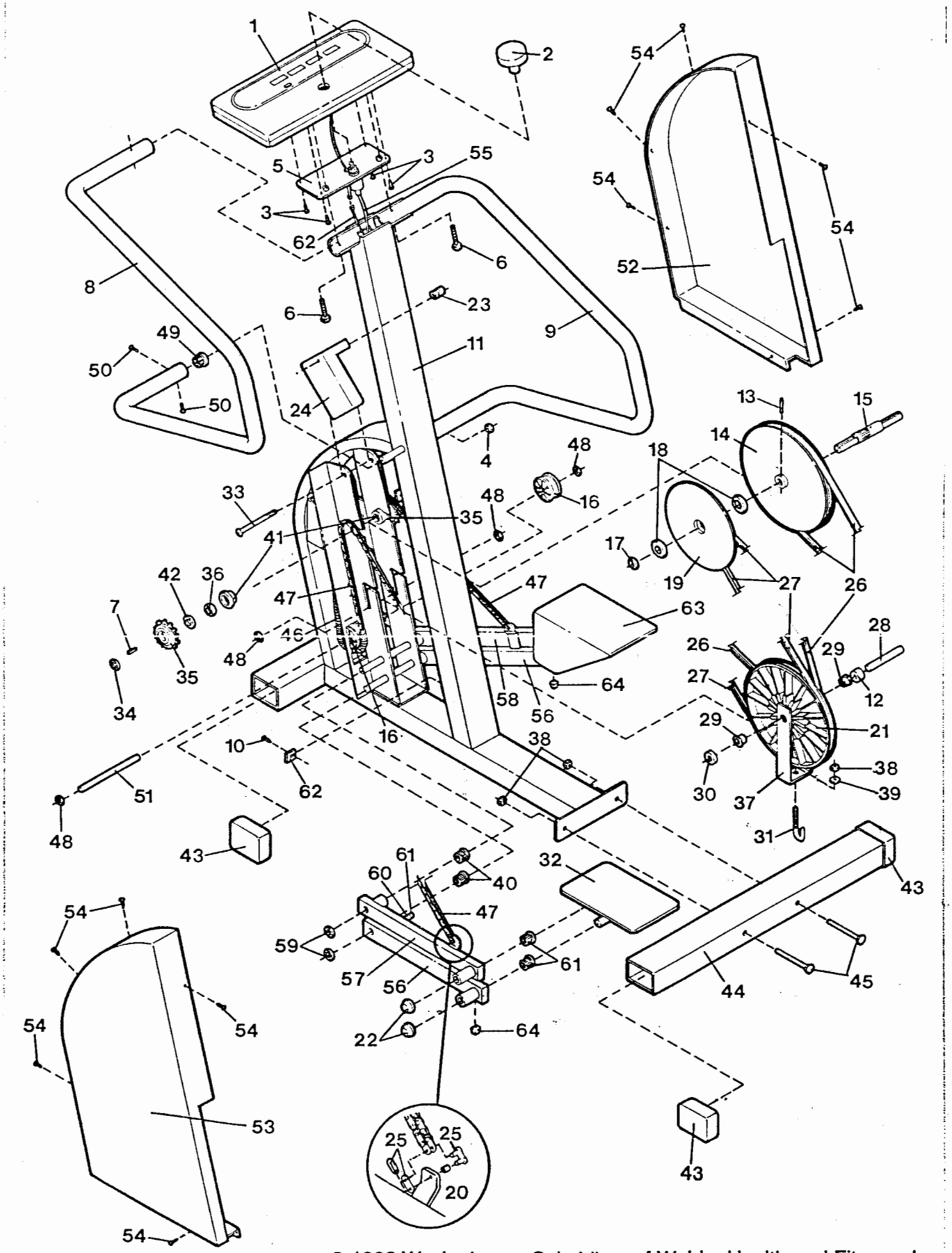

© 1993 Weslo, Inc., a Subsidiary of Weider Health and Fitness, Inc.