EXPLODED DRAWING- Model No. WL870011
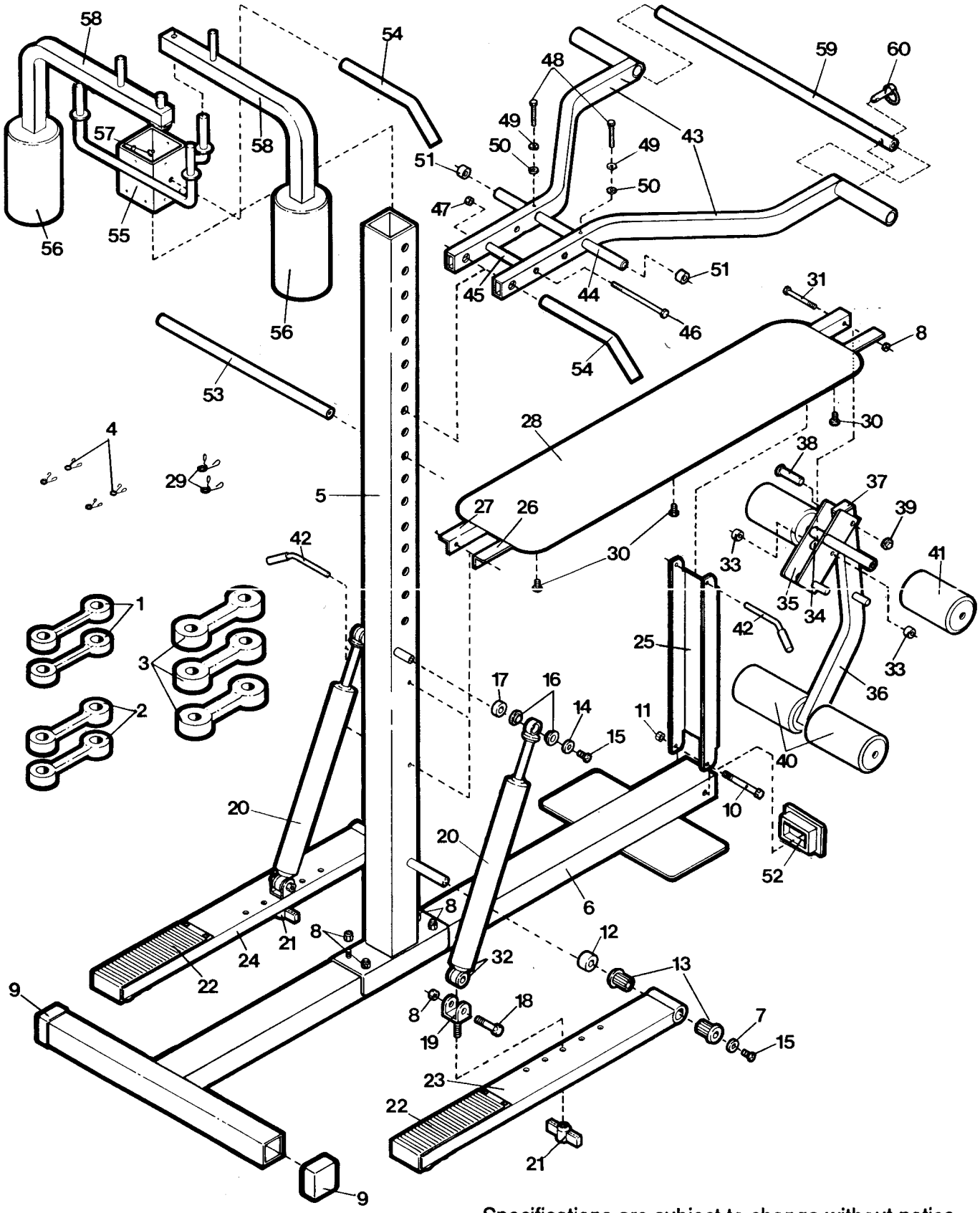
Rev. 11/91