EXPLODED DRAWING—Model No. WLEL25042
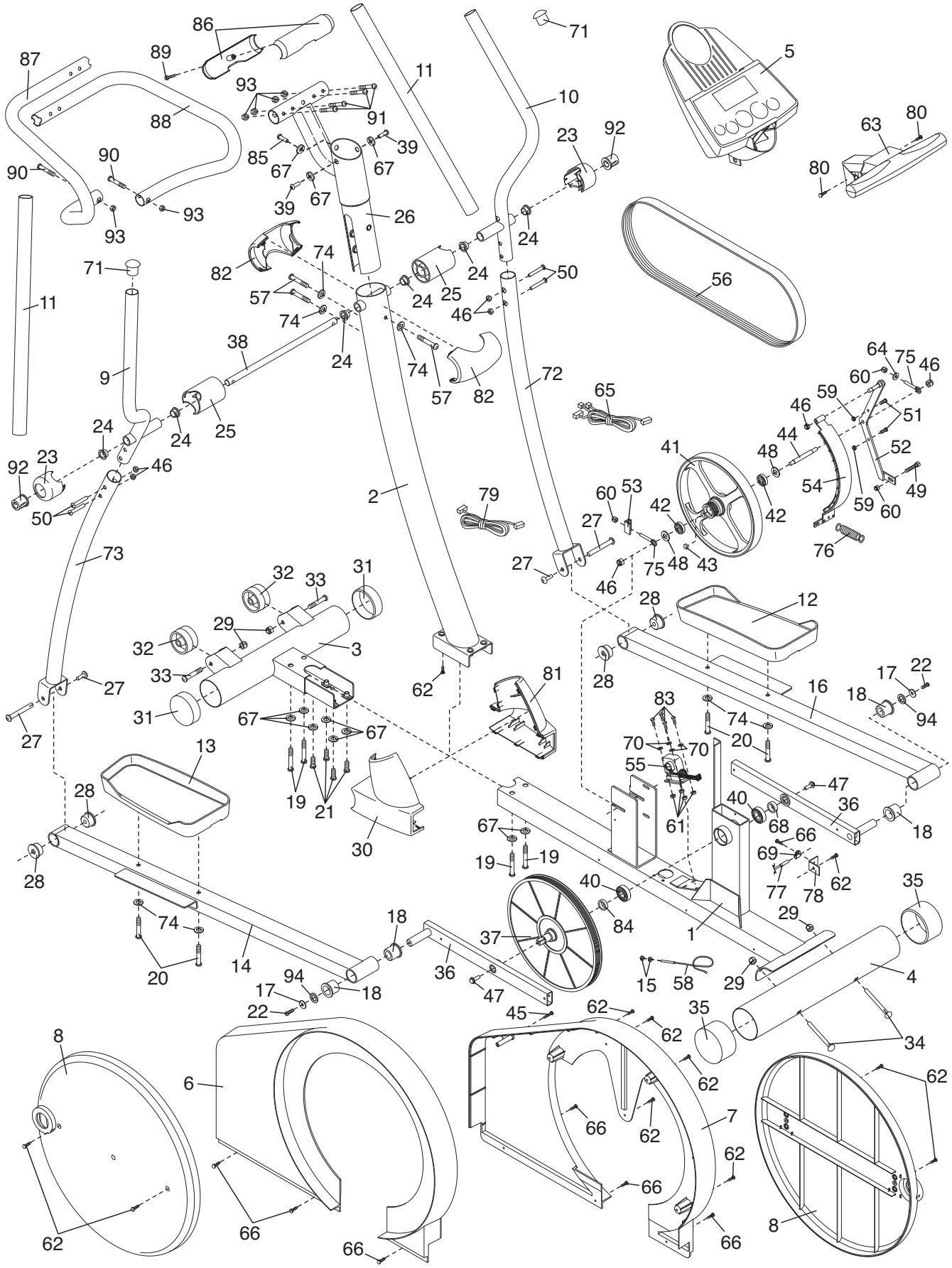
R0904A