EXPLODED DRAWING—Model No. WLEMEX09920
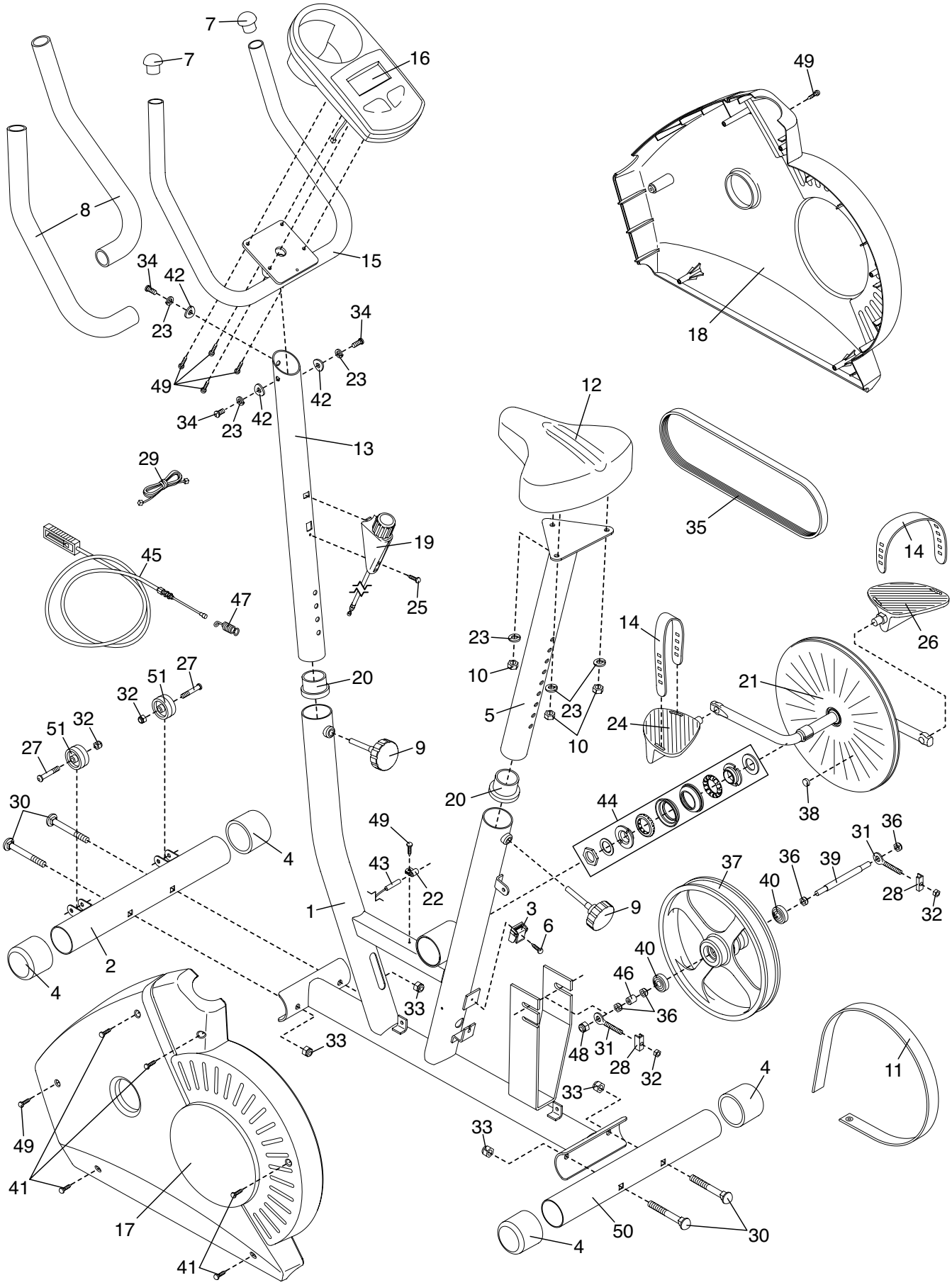
R1002A