EXPLODED DRAWING—Model No. WLEX12010
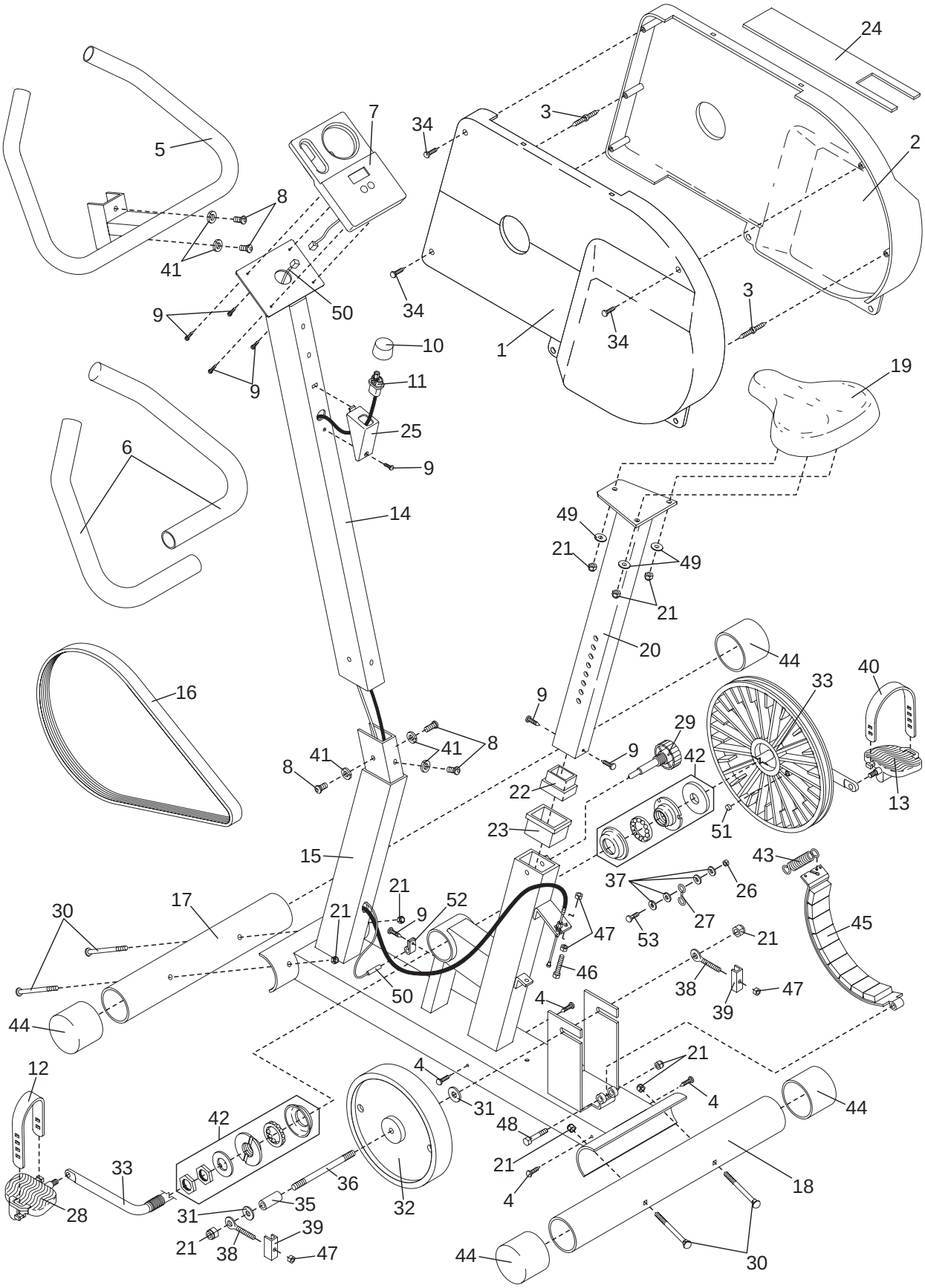
R0701B