EXPLODED DRAWING—Model No. WLEX23180
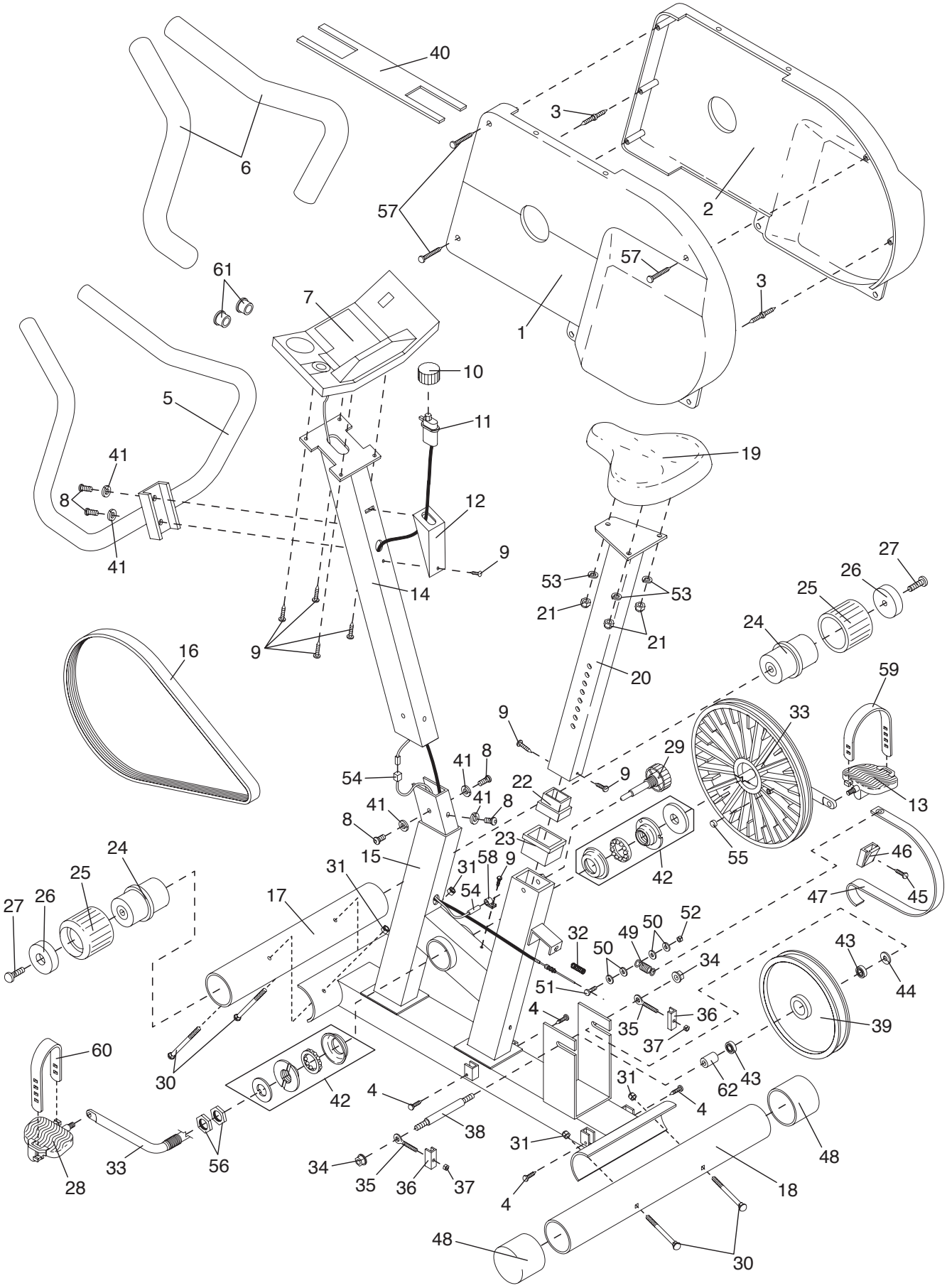
R0898A