EXPLODED DRAWING—Model No. WLEX31308.0
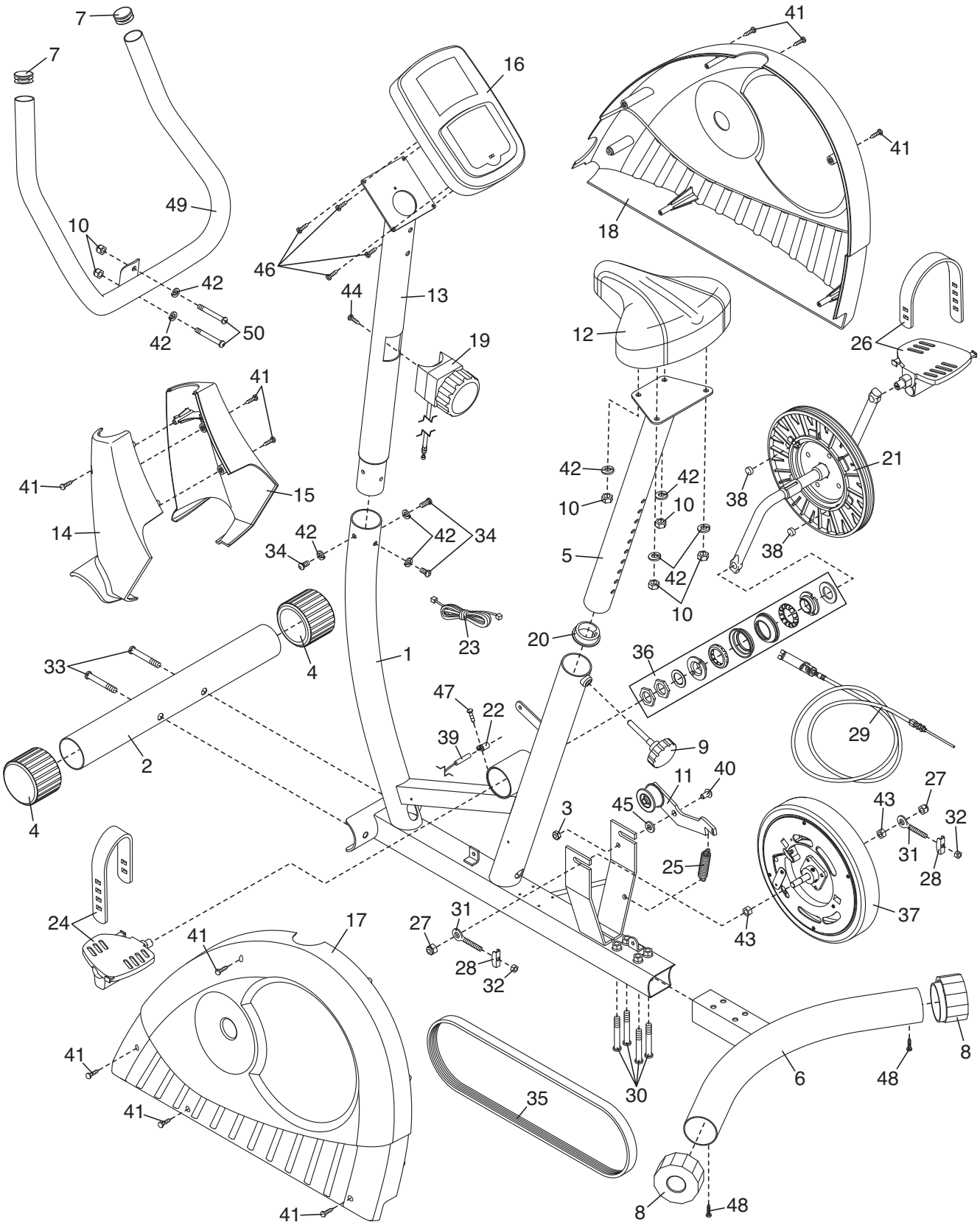
R0309A