EXPLODED DRAWING—Model No. WLEX31510.1
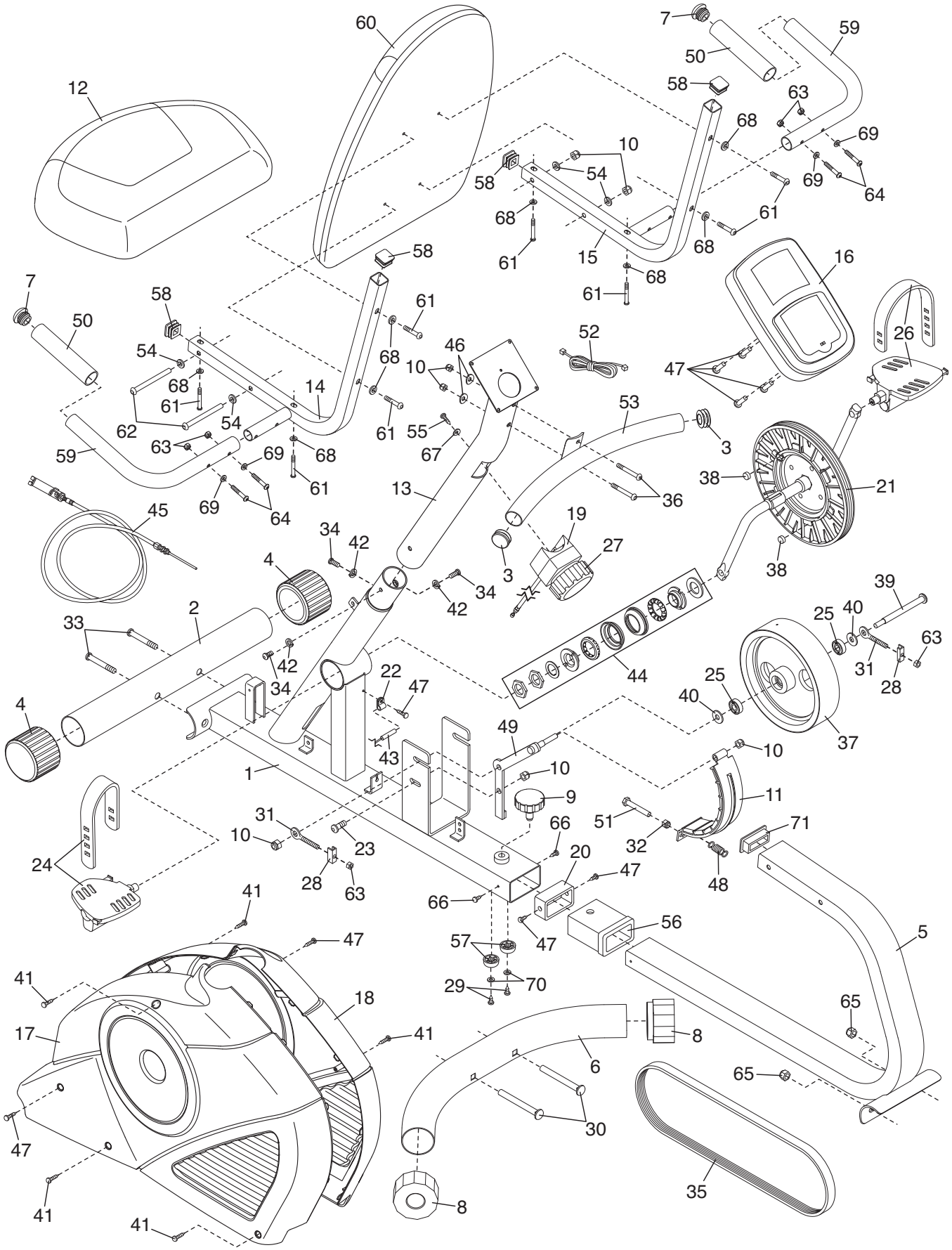
R0710A