EXPLODED DRAWING—Model No. WLEX60907.0
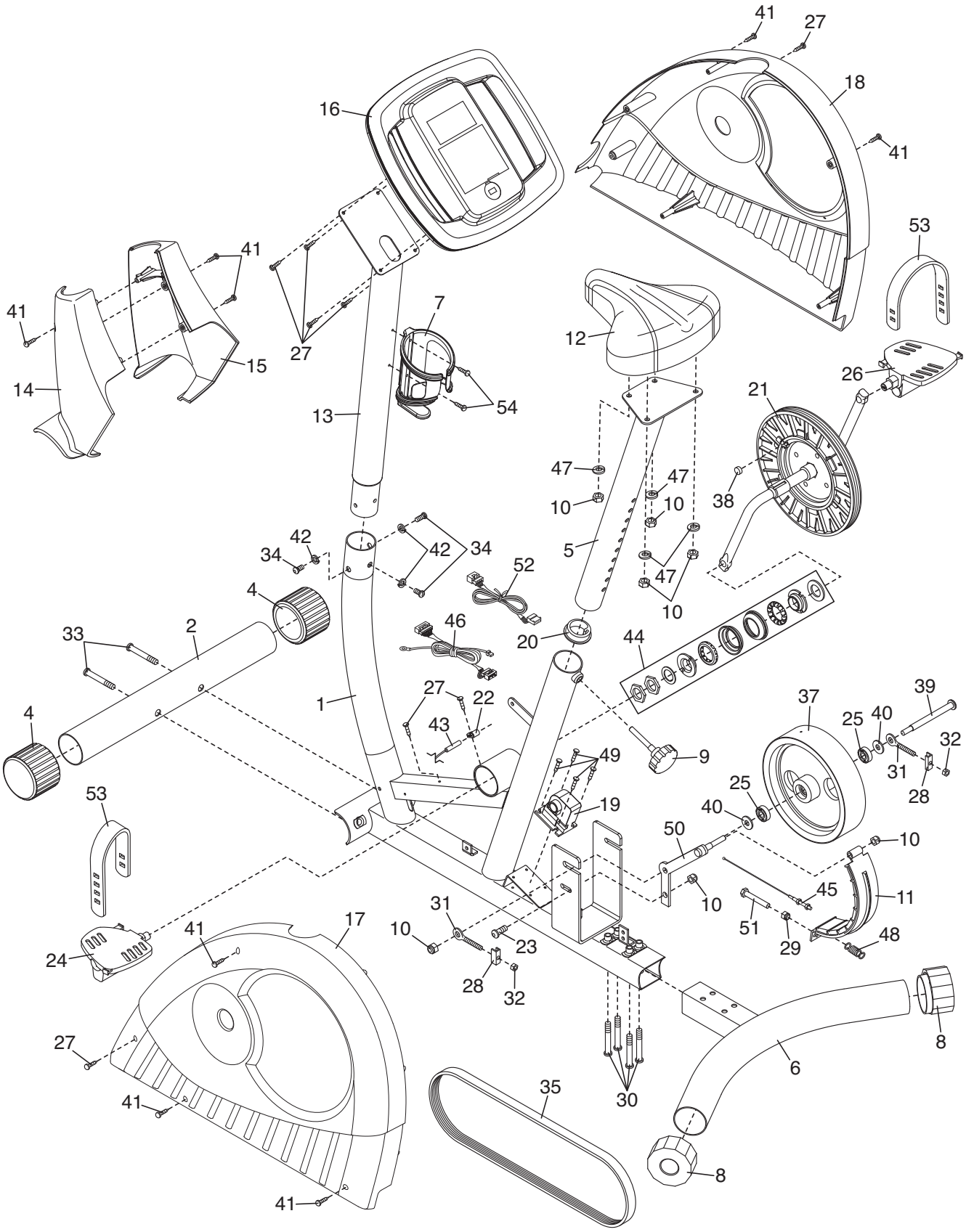
R1109A