EXPLODED DRAWING—Model No. WLEX61408.0
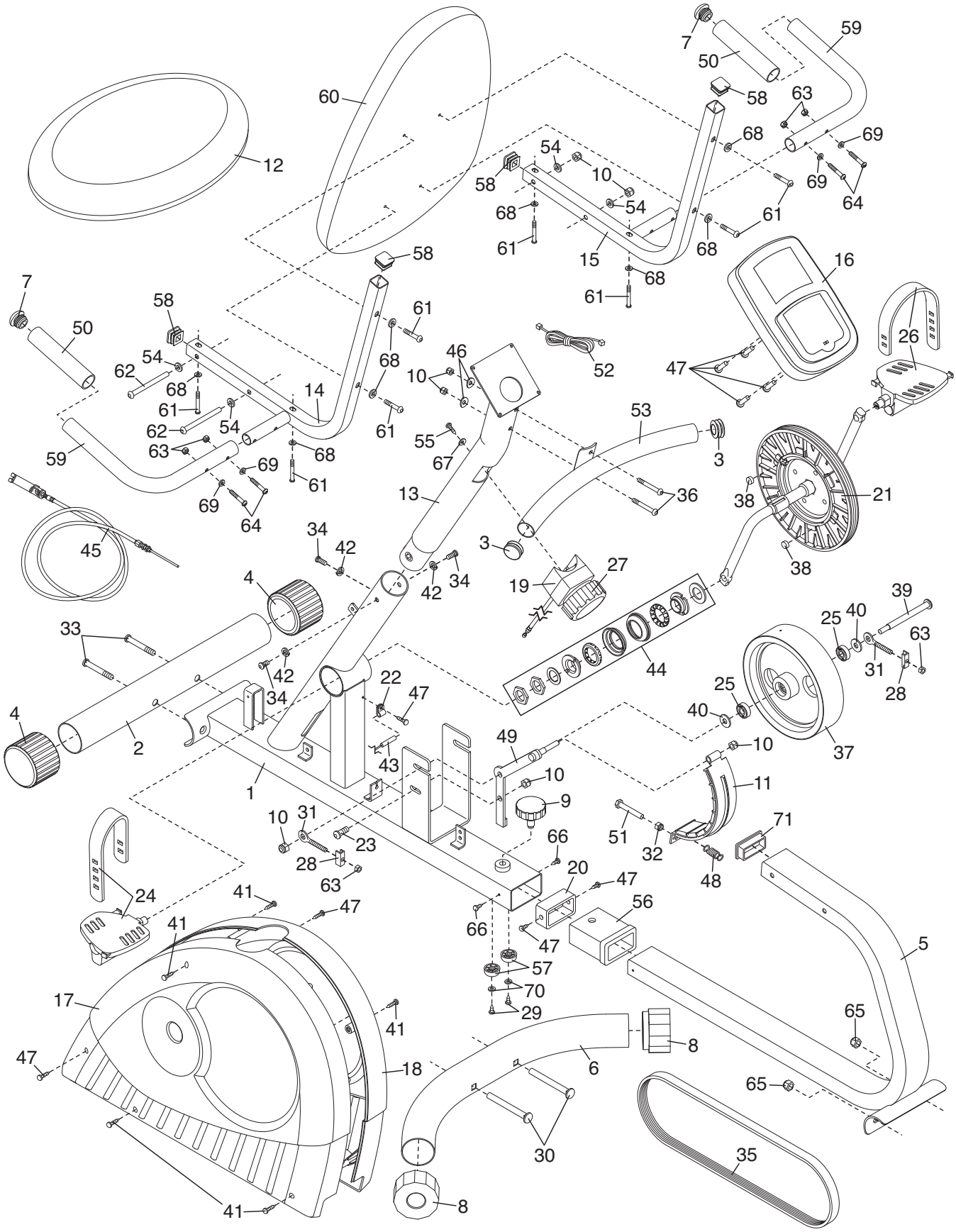
R0610A