EXPLODED DRAWING—Model No. WLEX69050

R0595A

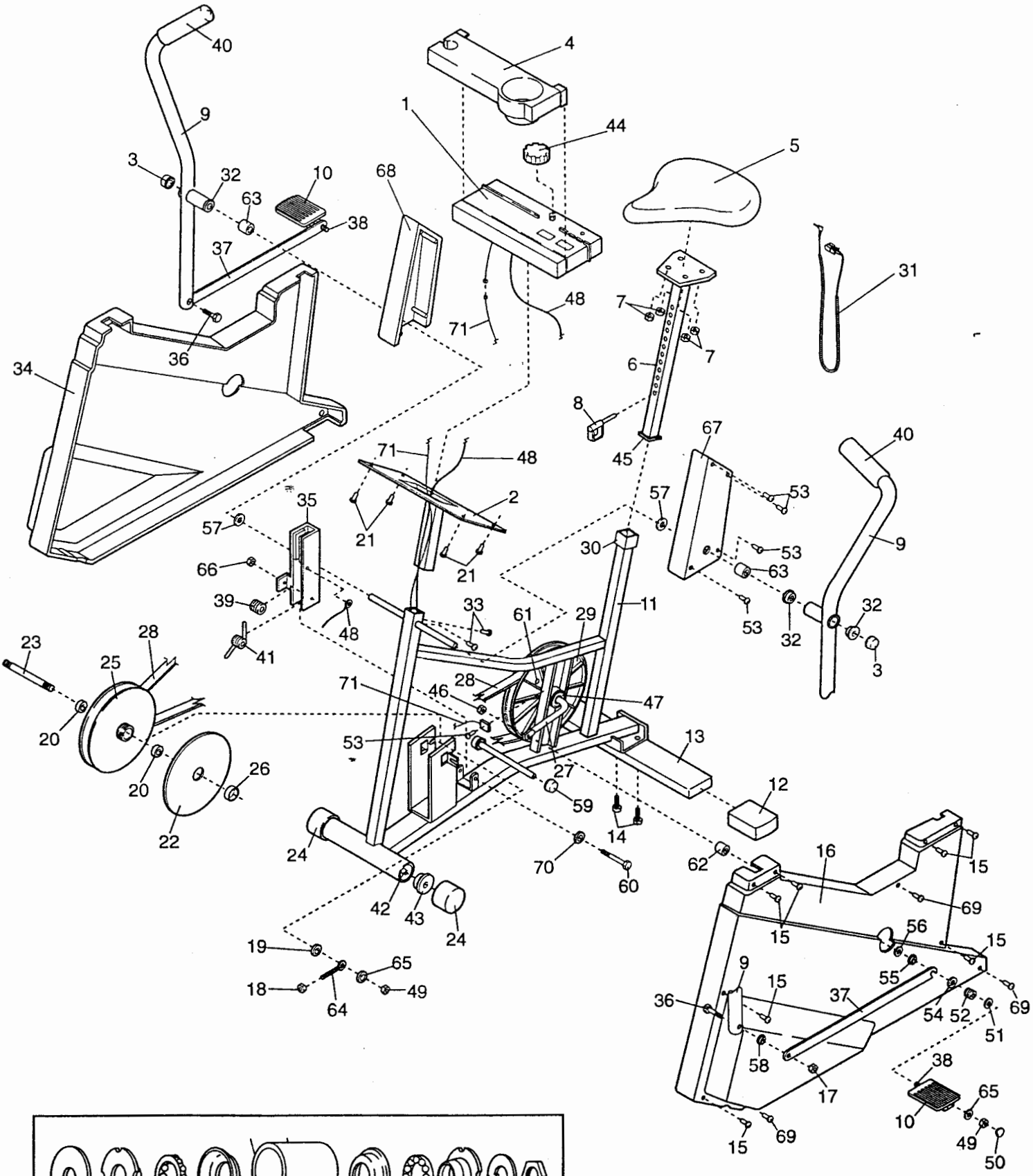

CRANK HARDWARE (47)