Exploded Drawing — Model No. WLHS43080
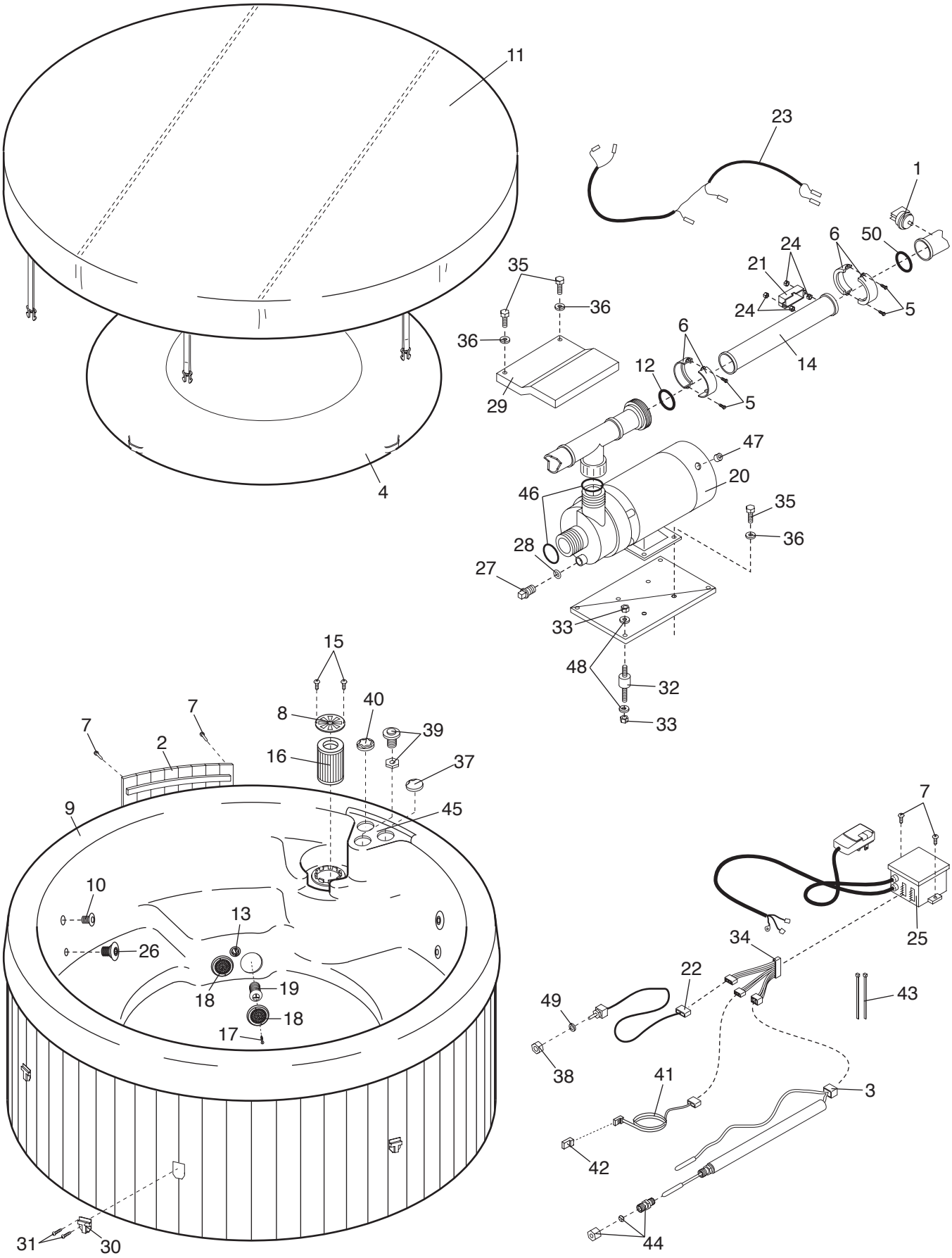
R0299A