# Exploded Drawing—Model No. WLHS43082
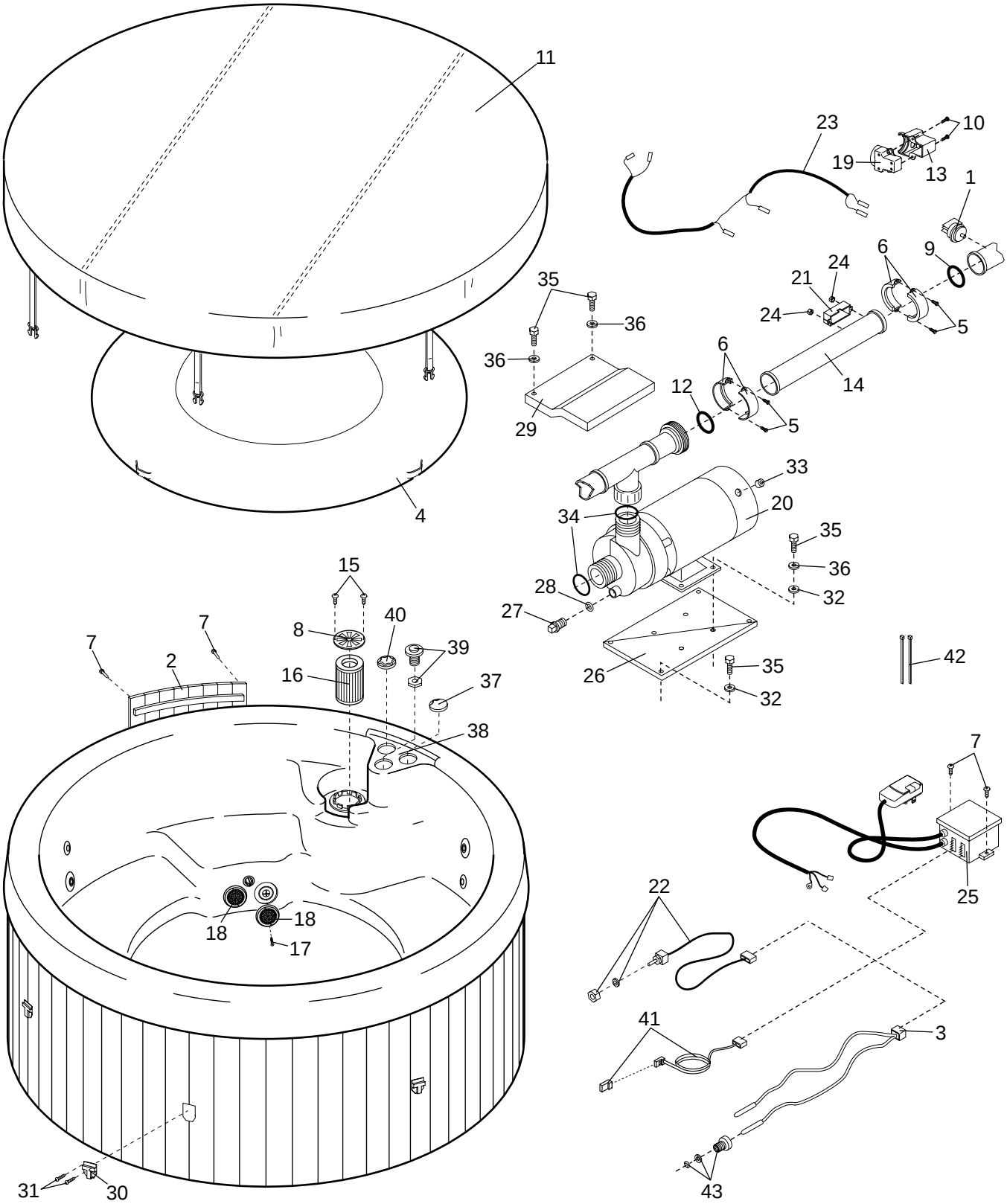
R0401A