Exploded Drawing — Model No. WLHS43081
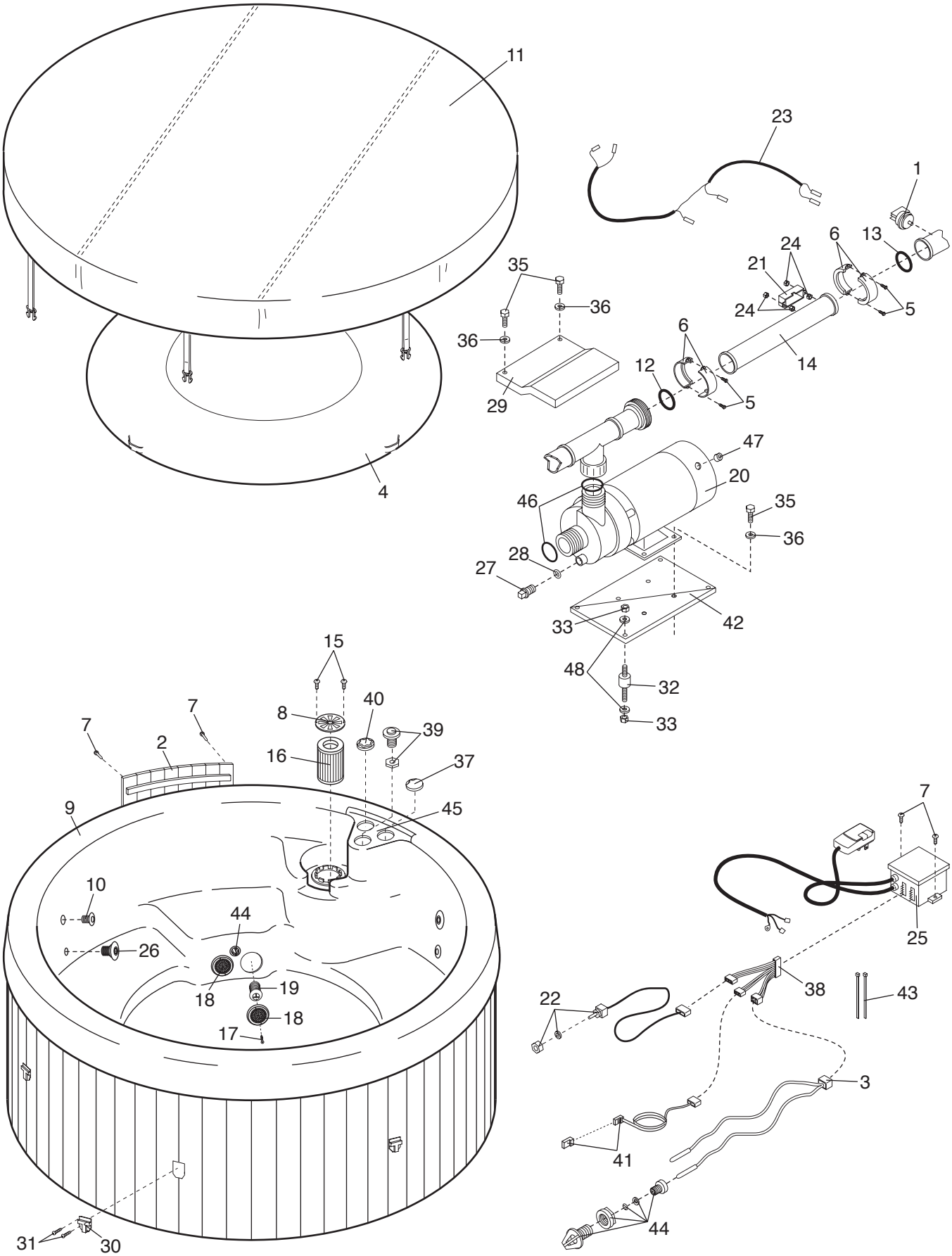
R0399A