EXPLODED DRAWING—Model No. WLTL42081
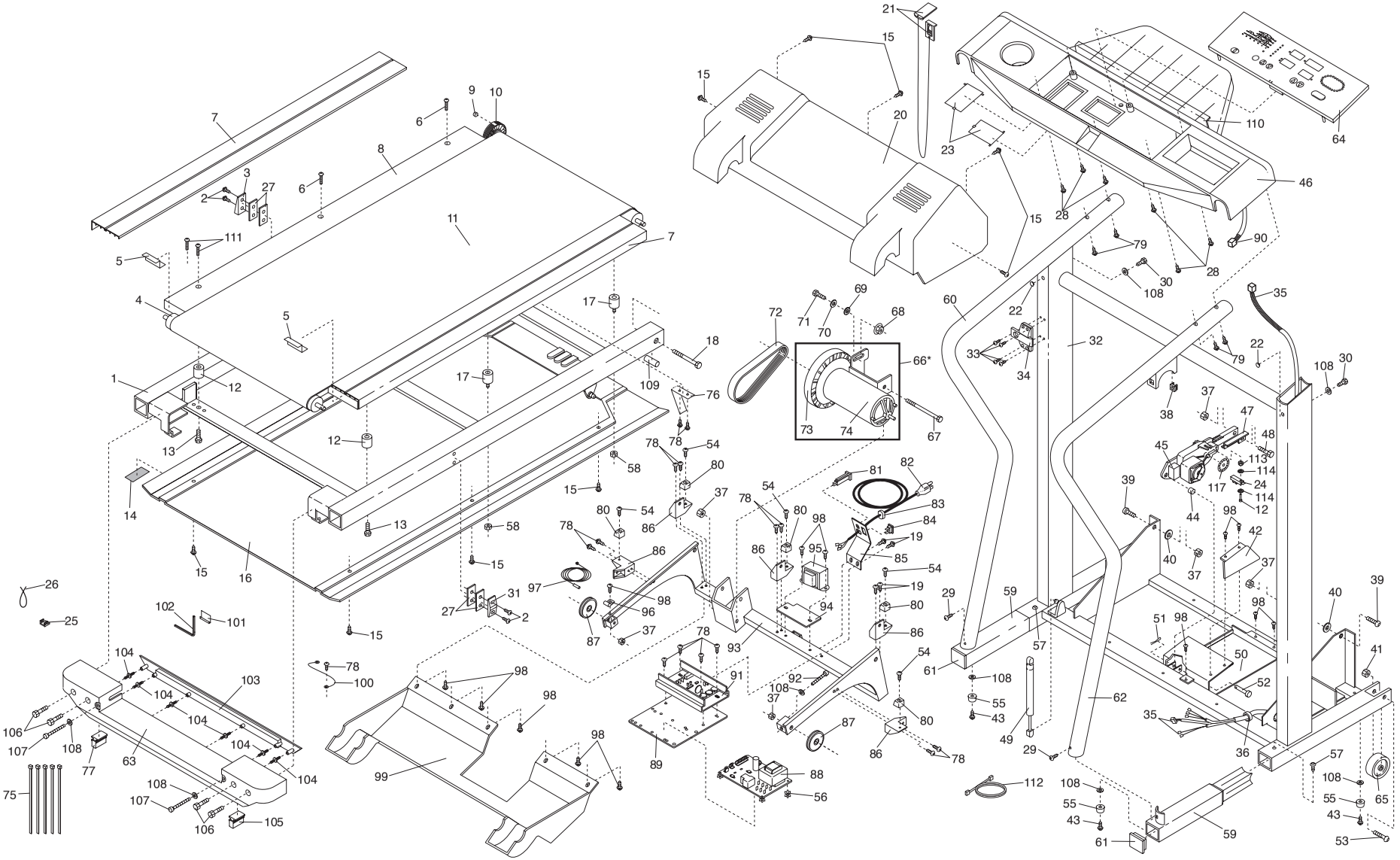
R0299A