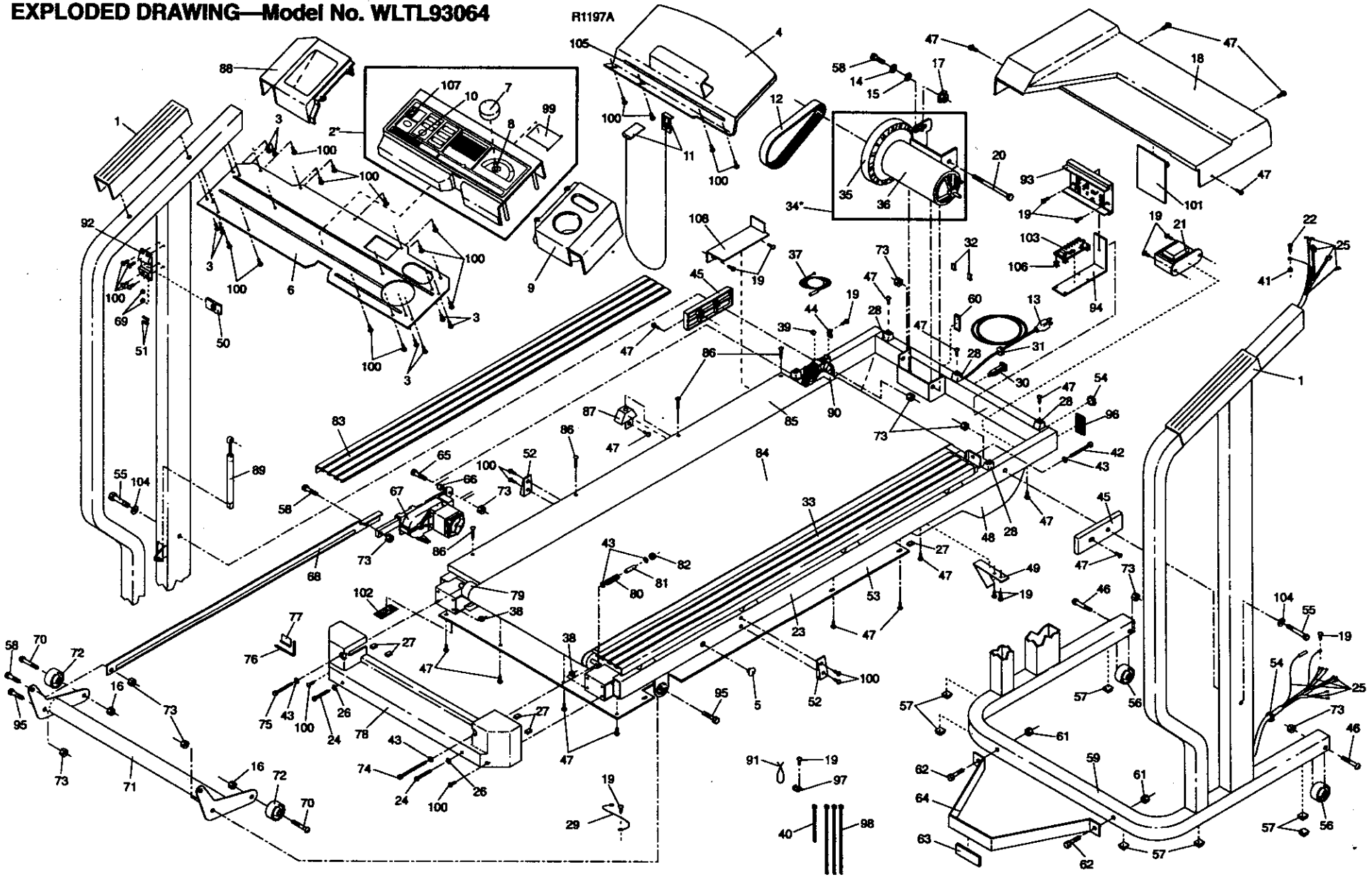EXPLODED DRAWING—Model No. WLTL93064