PRO•FORM®

A Subsidiary of Welder Health and Fitness, Inc.

2010 EXL™

PROGRAMMABLE SPEED/INCLINE INSTANT RECALL MEMORY

Model No. PF352300
Serial No._____
Write the serial number in the space above for reference.

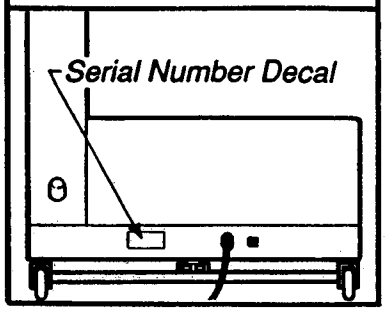

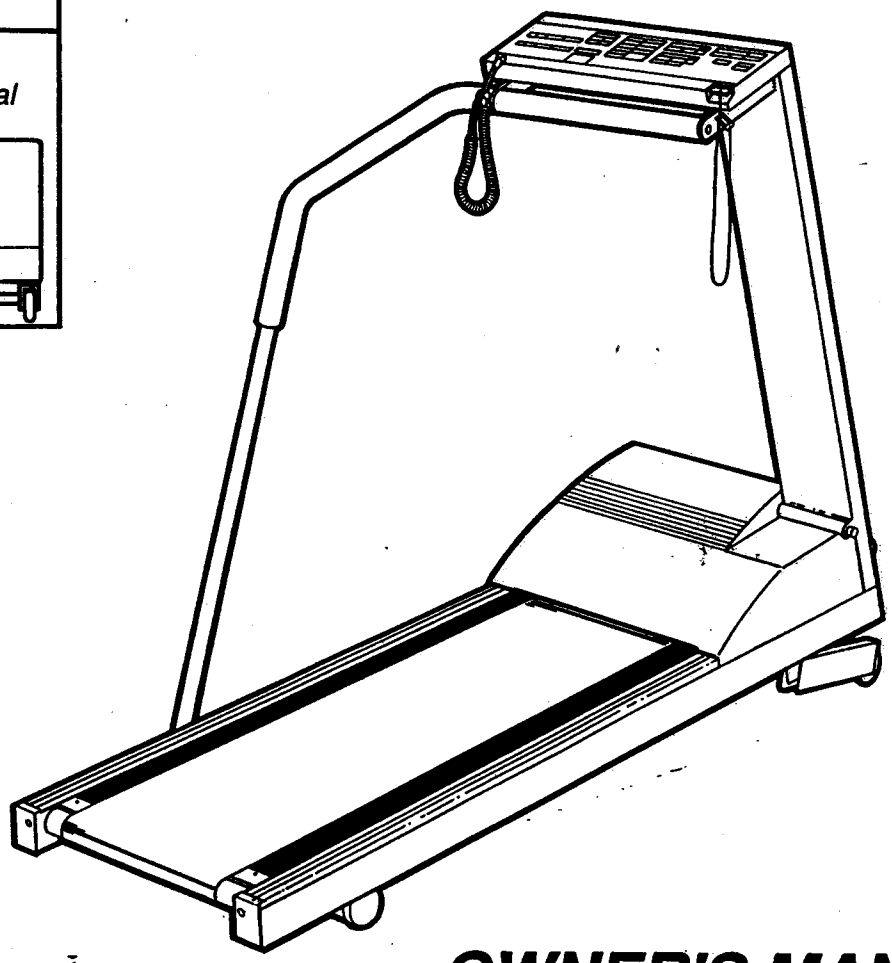

OWNER'S MANUAL

QUESTIONS? ***As a manufacturer, we are committed to providing you complete customer satisfaction. If you have any questions, or find there are missing or damaged parts, we will guarantee you complete satisfaction through direct assistance from our factory. TO AVOID UNNECESSARY DELAYS, PLEASE CALL DIRECT TO OUR TOLL-FREE CUSTOMER HOT LINE. The trained technicians on our Customer Hot Line will provide immediate assistance, free of charge to you. CUSTOMER HOT LINE: 1-800-999-3756, Monday-Friday, 6 a.m.-6 p.m. MST.***

CAUTION! ***Read all safety precautions and instructions in this manual carefully before using this equipment. Save this manual for future reference.***

Part No. 103621 4/91 Printed in USA

Copyright © 1991 Pro Form Fitness Products, Inc.

TABLE OF CONTENTS

Warranty 2
Important Safety Precautions 3
Before You Begin 4
Assembly 5
Operation and Adjustment 5
Maintenance and Trouble-Shooting 11
Conditioning Guidelines 13
Part List 14
Exploded Drawing 15
Ordering Replacement Parts . . . . . Back Cover

LIMITED WARRANTY

Pro Form Fitness Products, Inc. ("Pro Form") warrants this product to be free from defects in workmanship and material, under normal use and service conditions, for a period of ninety (90) days from the date of purchase. This warranty extends only to the original purchaser. Pro Form's obligation under this Warranty is limited to replacing or repairing, at Pro Form's option, the product at one of its authorized service centers. All products for which warranty claim is made must be received by Pro Form at one of its authorized service centers with all freight and other transportation charges prepaid, accompanied by sufficient proof of purchase. All returns must be pre-authorized by Pro Form. Pre-authorization may be obtained by calling Pro Form's Customer Service Department at 1-800-999-3756. This warranty does not extend to any product or damage to a product caused by or attributable to freight damage, abuse, misuse, improper or abnormal usage or repairs not provided by a Pro Form authorized service center or for products used for commercial or rental purposes. No other warranty beyond that specifically set forth above is authorized by Pro Form.

PRO FORM IS NOT RESPONSIBLE OR LIABLE FOR INDIRECT, SPECIAL OR CONSEQUENTIAL DAMAGES ARISING OUT OF OR IN CONNECTION WITH THE USE OR PERFORMANCE OF THE PRODUCT OR OTHER DAMAGES WITH RESPECT TO ANY ECONOMIC LOSS, LOSS OF PROPERTY, LOSS OF REVENUES OR PROFITS, LOSS OF ENJOYMENT OR USE, COSTS OF REMOVAL, INSTALLATION OR OTHER CONSEQUENTIAL DAMAGES OF WHATSOEVER NATURE. SOME STATES DO NOT ALLOW THE EXCLUSION OR LIMITATION OF INCIDENTIAL OR CONSEQUENTIAL DAMAGES. ACCORDINGLY, THE ABOVE LIMITATION MAY NOT APPLY TO YOU.

THE WARRANTY EXTENDED HEREUNDER IS IN LIEU OF ANY AND ALL OTHER WARRANTIES AND ANY IMPLIED WARRANTIES OF MERCHANTABILITY OR FITNESS FOR A PARTICULAR PURPOSE IS LIMITED IN ITS SCOPE AND DURATION TO THE TERMS SET FORTH HEREIN. SOME STATES DO NOT ALLOW LIMITATIONS ON HOW LONG AN IMPLIED WARRANTY LASTS. ACCORDINGLY, THE ABOVE LIMITATION MAY NOT APPLY TO YOU.

This warranty gives you specific legal rights. You may also have other rights which vary from state to state.

PRO FORM Fitness Products, Inc., 1500 S. 1000 W., Logan, UT 84321-9813

IMPORTANT SAFETY PRECAUTIONS

WARNING: To reduce the risk of burns, fire, electric shock or injury to persons, read the following important safety precautions and information before operating the treadmill.

1. Position the treadmill on a level surface, with at least 8 feet of clearance behind the treadmill. Do not place the treadmill on thick carpet, near water or outdoors. Do not operate where aerosol products are used or where oxygen is being administered.

2. Plug the power cord directly into a grounded circuit carrying 12 or more amps. No other appliance should be on the same circuit. (See the OPERATION AND ADJUSTMENT section of this manual for proper grounding instructions.) Keep the power cord away from heated surfaces. If an extension cord is required, use only a 14-gauge, general-purpose cord of six to ten feet in length with a three-wire conductor.

3. Never move the walking belt while the power is turned off. Do not operate the treadmill if the power cord or plug are damaged, or if the treadmill is not working properly. (Refer to the BEFORE YOU BEGIN section of this manual if the treadmill is not working properly.)

4. Wear appropriate exercise attire when using the treadmill. Do not wear loose clothing that could become caught in the treadmill. *Always wear running or aerobic shoes. Never use the treadmill with bare feet, wearing only stockings, or in sandals.* Athletic support clothes are recommended for both men and women.

5. Never start the treadmill while you are standing on the treadmill belt. Always hold the handrail when exercising on the treadmill.

6. Never allow more than one person on the treadmill at a time. Use the treadmill only as described in this manual.

7. Keep small children away from the treadmill during operation. Never leave the treadmill unattended while it is running. Always turn the power off when the treadmill is not in use.

8. Never drop or insert any object into any opening.

9. Always unplug the power cord before performing the maintenance and adjustment procedures described in this manual. Never remove the motor hood unless instructed to do so by an authorized service representative. Servicing other than the procedures described in this manual should be performed by an authorized service representative only.

10. This treadmill is capable of high speeds. Adjust the speed slowly to avoid sudden jumps in speed.

WARNING: Before beginning this or any exercise program consult your physician. This is especially important for individuals over the age of 35 or persons with pre-existing health problems. Read all instructions before using. Pro Form assumes no responsibility for personal injury or property damage sustained by or through the use of this product.

SAVE THESE INSTRUCTIONS

BEFORE YOU BEGIN

Thank you for selecting a Pro Form 2010 EXL treadmill. The 2010 EXL combines state-of-the-art technology with innovative design to let you enjoy an excellent cardiovascular workout at your convenience, in the privacy of your home. Your exercise on the 2010 EXL will be enhanced by such features as a key-activated power switch, electronic speed and incline control, and a programmable exercise computer.

For your safety and benefit, **read this manual carefully before using this equipment.** If you have additional questions, please call our Customer Service Department toll-free at **1-800-999-3756,** Monday through Friday, 6 a.m. until 6 p.m. Mountain Time (excluding holidays). In all communications regarding this product, please refer to your product model number and serial number. The model number is printed on the front cover of this manual. The serial number is recorded on a decal affixed to the product (see the drawing on the front cover for the location).

Before reading further, please review the drawing below and familiarize yourself with the parts labeled.

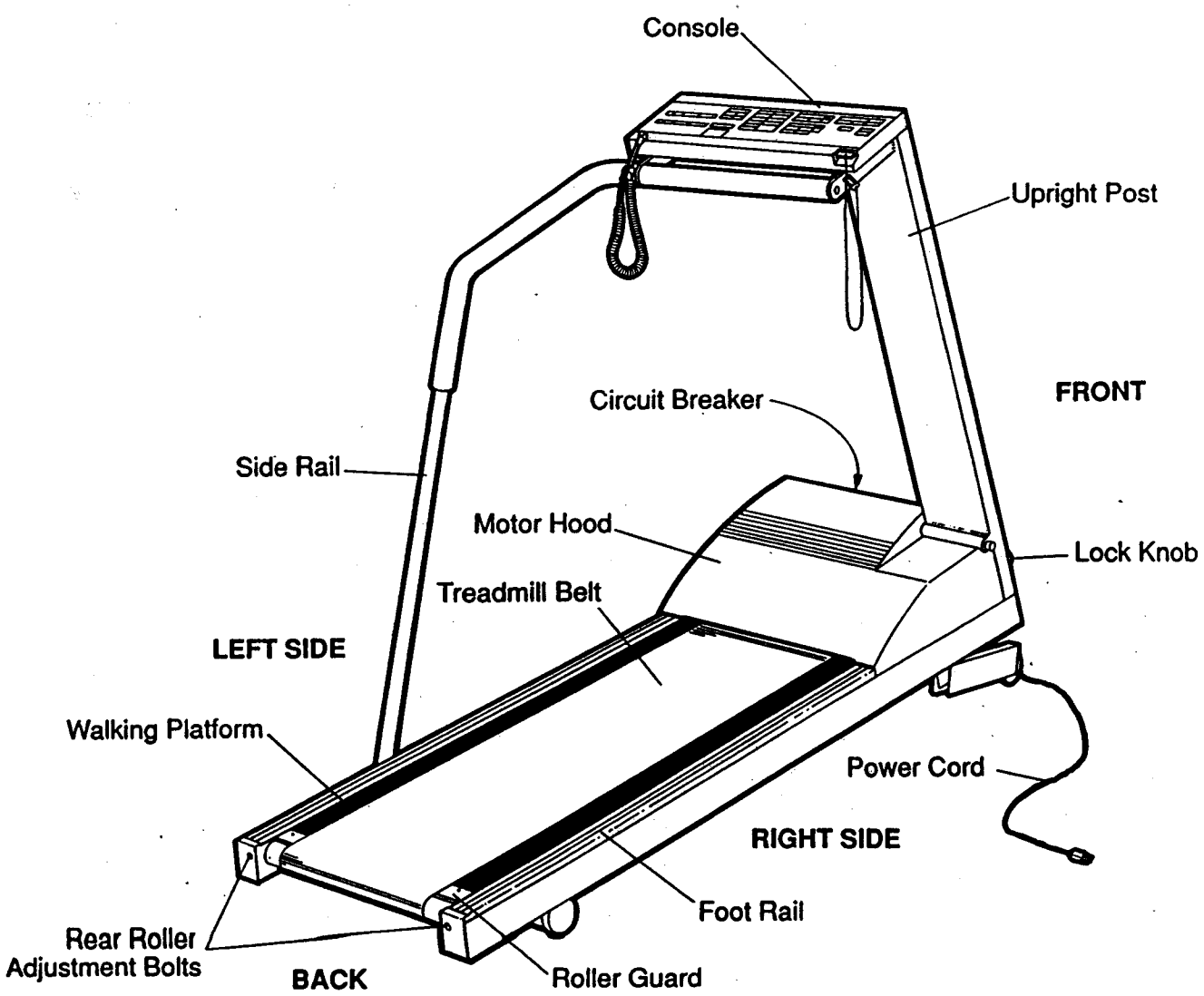

ASSEMBLY

Set the treadmill in a cleared area and remove the packing materials. **Be sure that all parts are included before disposing of the packing materials.** Assembly can be completed using the allen wrench included, and your own standard screwdriver. If you need help with part identification, refer to the part list and exploded drawing on pages 14 and15.

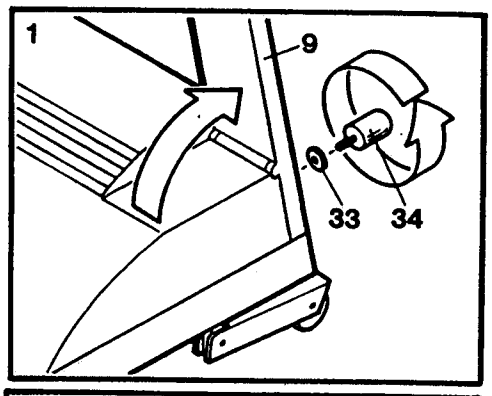

1. Raise the Upright Post (9) to a vertical position. Insert the Lock Knob (34), with the Lock Knob Washer (33) into the Upright Post, and turn the Knob clockwise until almost tight. Leave a little play in the Upright Post for the following steps.

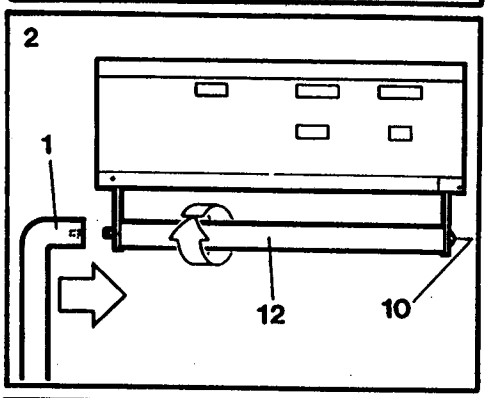

2. Align the upper end of the Side Rail (1) with the left end of the Handrail (12). Turn the Handrail as shown to thread the Handrail into the Side Rail. (Note: If the Handrail will not turn easily, loosen the Handrail Bolt [10] slightly.) Tighten the Handrail and the Handrail Bolt.

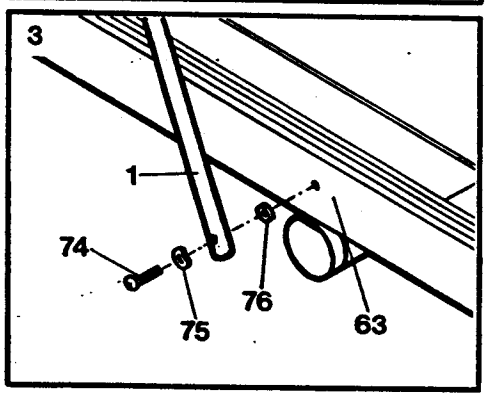

3. Align the lower end of the Side Rail (1) with the hole in the side of the treadmill Frame (63). Attach the Side Rail with a Side Rail Bolt (74), Formed Washer (75) and Side Rail Washer (76) as shown. Tighten the Lock Knob (see step 1).

Make sure that all parts are tightened securely before using the treadmill.

OPERATION AND ADJUSTMENT

GROUNDING INSTRUCTIONS

This product must be grounded. If it should malfunction or break down, grounding provides a path of least resistance for electric current to reduce the risk of electric shock. This product is equipped with a cord having an equipment-grounding conductor and a grounding plug. **The plug must be plugged into an appropriate outlet that is properly installed and grounded in accordance with all local codes and ordinances.**

DANGER: Improper connection of the equipment-grounding conductor can result in a risk of electric shock. Check with a qualified electrician or serviceman if you are in doubt as to whether the product is properly grounded. Do not modify the plug provided with the product - if it will not fit the outlet, have a proper outlet installed by a qualified electrician.

This product is for use on a nominal 120-volt circuit, and has a grounding plug that looks like the plug illustrated in Drawing 1. A temporary adapter that looks like the adapter illustrated in Drawing 2 may be used to connect this plug to a 2-pole receptacle as shown in Drawing 2 if a properly grounded outlet is not available. The temporary adapter should be used only until a properly grounded outlet (Drawing 1) can be installed by a qualified electrician. The green colored rigid ear, lug, or the like extending from the adapter **must be** connected to a permanent ground such as a properly grounded outlet box cover. Whenever the adapter is used it **must be** held in place by a metal screw. **Some 2-pole receptacle outlet box covers are not grounded. Contact a qualified electrician to determine if the outlet box cover is grounded before using an adapter.**

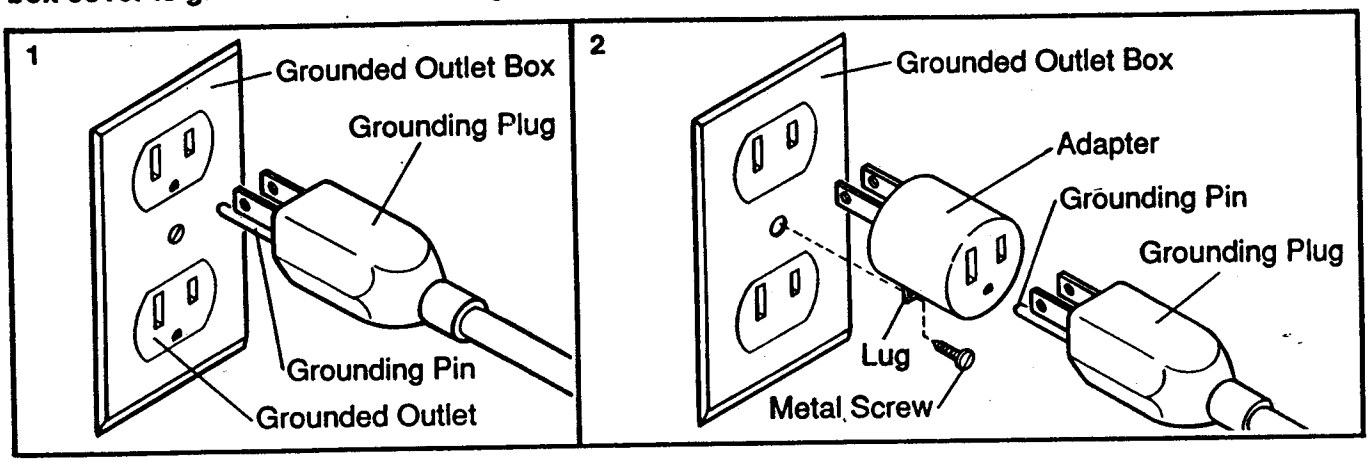

MAINTENANCE-FREE WALKING PLATFORM

This treadmill features a walking platform with a specially designed, low friction surface. **Do not apply silicone spray or any other substance to the walking platform or the treadmill belt.** Such substances will deteriorate the surface of the platform and cause excessive wear.

DIAGRAM OF THE TREADMILL CONSOLE

Please read all instructions carefully before operating the console. Refer to the diagram below and the treadmill console for clarification.

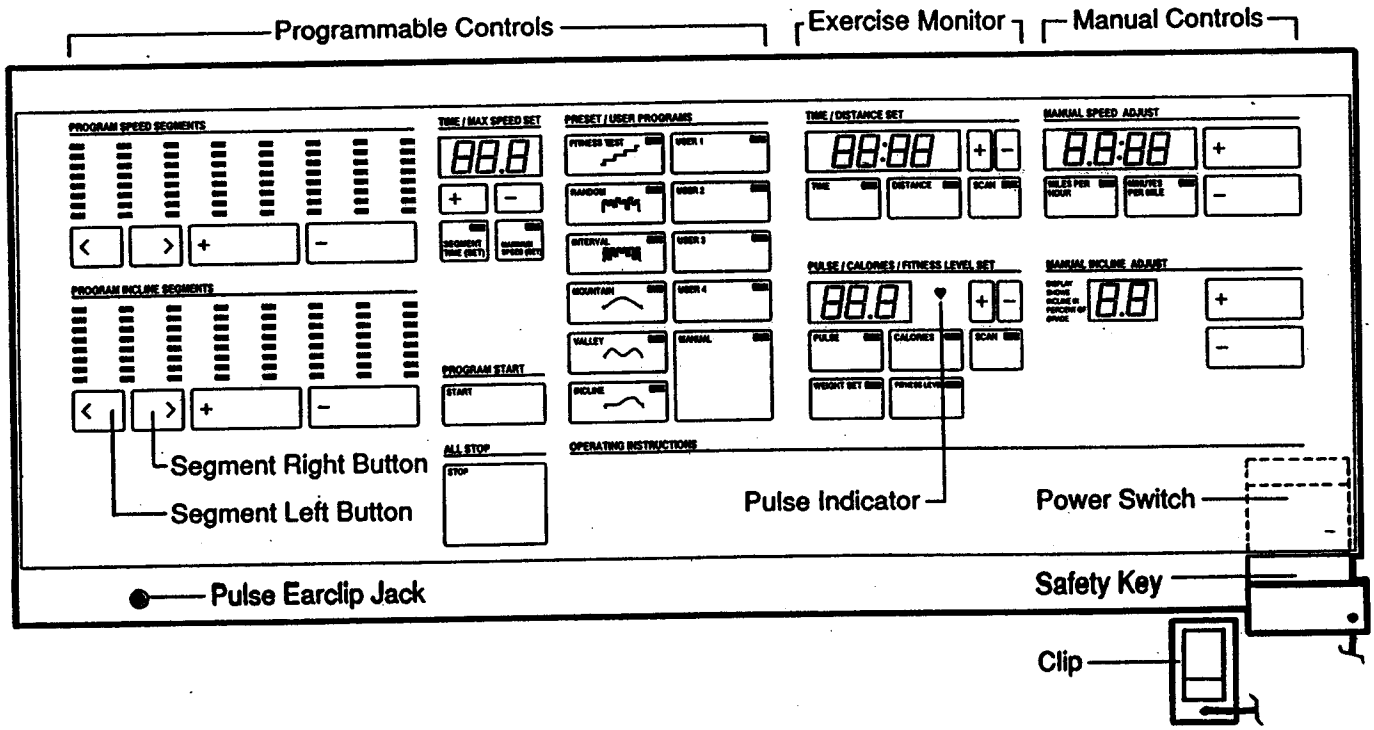

TURNING THE POWER ON

Stand on the treadmill with your feet on the foot rails. **Do not stand on the treadmill belt.**

Attach the clip on the safety key to the waistband of your clothing. **Always wear the clip when operating the treadmill.** If you should slip or fall while exercising, the safety key will be pulled from the console, instantly shutting the power off.

Insert the safety key into the power switch on the right side of the console. **Note: When the safety key is first inserted after plugging the power cord in, the treadmill will perform an incline test, automatically rising to maximum incline and then returning to minimum.**

EXERCISE MONITOR OPERATION

The console features an electronic exercise monitor, designed to measure your performance and progress as you exercise. You can choose from nine different modes, and change modes at any time during your workout. Indicators on the mode buttons will light to show which modes are currently displayed. Modes can be selected in the following manner:

TIME: Press the TIME button beneath the TIME/DISTANCE SET display. As you exercise, the elapsed time will be displayed.

TIME GOAL: Press the TIME button beneath the TIME/DISTANCE SET display. Next, press the "+" button beside the display to enter the length of time you plan to exercise. Each time the button is pressed, the time displayed will change by 10 seconds. The button can be held down to enter the length of time quickly. As you exercise, the time will be counted down. When the time reaches zero, a tone will sound. Note: The TIME and TIME GOAL modes cannot be selected at the same time. When the console is in the programmable mode, a time goal will be set automatically. (See PROGRAMMABLE TREADMILL OPERATION below.)

DISTANCE: Press the DISTANCE button beneath the TIME/DISTANCE SET display. As you exercise, the distance you have walked or run will be displayed.

DISTANCE GOAL: Press the DISTANCE button beneath the TIME/DISTANCE SET display. Next, press the "+" button beside the display to enter the distance you plan to walk or run during your workout. Each time the button is pressed, the distance displayed will change by 0.1 mile. The button can be held down to enter the distance quickly. As you exercise, the distance will be counted down. When the distance reaches zero, a tone will sound. Note: The DISTANCE and DISTANCE GOAL modes cannot be selected at the same time.

TIME/DISTANCE SCAN: Press the SCAN button beneath the TIME/DISTANCE SET display. As you exercise, the TIME (or TIME GOAL) and DISTANCE (or DISTANCE GOAL) modes will both be displayed in a repeating cycle.

PULSE: Press the PULSE button beneath the PULSE/CALORIES/FITNESS LEVEL SET display. Plug the pulse earclip into the jack on the left side of the console, and attach the earclip to your left ear lobe. Slide the clothes clip onto your collar to prevent excessive movement of the earclip wire. When your pulse is detected, the pulse indicator beside the display will flash on and off. After a few seconds, your heart rate will be displayed. Note: If your heart rate is not displayed, try rubbing your ear lobe and repositioning the earclip. You may find that it is helpful to stop exercising briefly while you measure your pulse.

PULSE GOAL: Press the PULSE button beneath the PULSE/CALORIES/FITNESS LEVEL SET display. Press the "+" and "-" buttons beside the display to enter the highest level you want your heart rate to reach during your workout. (See CONDITIONING GUIDELINES in this manual.) Each time one of the buttons is pressed, the heart rate displayed will change by 1 beat per minute. The buttons can be held down to enter the heart rate quickly. The heart rate can be set at 60 to 220 beats per minute. Plug the pulse earclip into the jack on the left side of the console, and attach the earclip to your left ear lobe. Slide the clothes clip onto your collar to prevent excessive movement of the earclip wire. When your pulse is detected, the pulse indicator beside the display will flash on and off. After a few seconds, your heart rate will be displayed. If your heart rate rises above the heart rate you entered as you exercise, a warning tone will sound until your heart rate subsides. Note: If your heart rate is not displayed, try rubbing your ear lobe and repositioning the earclip. You may find that it is helpful to stop exercising briefly while you measure your pulse.

CALORIES: For your Calorie expenditure to be measured accurately, your weight should be entered into the monitor. Press the WEIGHT SET button beneath the PULSE/CALORIES/FITNESS LEVEL SET display. Press the "+" or "-" buttons beside the display to enter your weight, in pounds. Each time one of the buttons is pressed, the weight displayed will change by 1.0 pound. The buttons can be held down to enter your weight quickly. Next, press the CALORIES button beneath the display. As you exercise, the number of Calories you have expended will be displayed.

PULSE/CALORIES SCAN: Press the SCAN button beneath the PULSE/CALORIES/FITNESS LEVEL SET display. As you exercise, the PULSE (or PULSE GOAL) and CALORIES modes will both be displayed in a repeating cycle.

MANUAL TREADMILL OPERATION

When the power is turned on, the indicator on the MANUAL button will light, and the treadmill will be in the manual mode. The treadmill belt will be stationary, and the incline of the treadmill will be 1.5%.

The console can display speed using two different units of measurement: miles per hour, or minutes per mile. Select the unit desired by pressing the MILES PER HOUR or MINUTES PER MILE buttons beneath the MANUAL SPEED ADJUST display. The indicator on the button you press will light to show which unit has been selected. Note: If you select MINUTES PER MILE, the speed of the treadmill belt must be at least 2.0 miles per hour.

The speed of the treadmill belt can be controlled using the "+" and "-" buttons beside the MANUAL SPEED ADJUST display. Each time one of the buttons is pressed, the speed will increase or decrease by 0.1 mile per hour. The buttons can be held down to change the speed quickly. Press the "+" button until the treadmill belt begins to move at slow speed. Hold the handrail and step carefully onto the moving belt. As you exercise, the speed of the belt can be changed as desired. To stop the treadmill belt, hold down the "-" button. **The belt can be stopped quickly, if necessary, by pressing the STOP button. CAUTION:** After the "+" or "-" buttons are pressed, it will take a few seconds for the treadmill belt to reach the selected speed setting. **Adjust the speed gradually until you are familiar with the operation of the treadmill.** When the "+" or "-" buttons are pressed, the display will show the selected speed setting. The display will then change to show the actual speed of the walking belt until the belt reaches the selected speed setting.

To vary the level of exercise intensity, the incline of the treadmill can be changed, from 1.5% up to 10%. Press the "+" or "-" buttons beside the MANUAL INCLINE ADJUST display to change the incline. Each time one of the buttons is pressed, the incline will increase or decrease by 0.5%. The buttons can be held down to change the incline quickly.

PROGRAMMABLE TREADMILL OPERATION

In the programmable mode, the console will control the speed and incline of the treadmill automatically according to programs you select. Six different preset programs are offered. In addition, you can create an endless number of your own "user" programs. Up to four user programs can be stored simultaneously in the computer's memory.

CREATING A USER PROGRAM

Press one of the four USER buttons. The indicator on the button you press will light. Be sure the treadmill belt is fully stopped before you continue.

The first step in creating a program is to set a speed range for the program. Press the MAXIMUM SPEED (SET) button beneath the TIME/MAX SPEED SET display. The minimum speed the treadmill belt can move during a program is 1.0 mile per hour. The maximum speed is preset at 2 miles per hour, as shown in the display. The maximum speed can be changed, if desired, by pressing the "+" button beneath the display. Each time the button is pressed, the maximum speed will increase by 0.1 mile per hour. The button can be held down to change the maximum speed quickly. The maximum speed can be set at 2 to 10 miles per hour.

Note: The incline range for all programs is 1.5% to 10%.

All programs consist of eight equal time periods, called "segments". The treadmill can be programmed to operate at a different speed and incline setting during each segment. The speed and incline settings can be programmed on the PROGRAM SPEED SEGMENTS and PROGRAM INCLINE SEGMENTS displays. Both displays are divided into eight vertical segments. A different speed setting can be programmed on each speed segment, and a different incline setting can be programmed on each incline segment. The setting of each speed or incline segment is shown by the number of bars lighted in the segment. If one bar is lighted, the segment is set for 1.0 mile per hour, or 1.5% incline. If all eight bars are lighted, the segment is set for the maximum speed, or 10% incline. If a program has not previously been created, four bars will be lighted in each speed segment, and three bars will be lighted in each incline segment.

The first segments of both displays will be flashing. To program the first speed segment, press the "+" or "-" buttons beneath the PROGRAM SPEED SEGMENTS display. Each time the "+" button is pressed, a tone will sound and the speed setting will increase. Every few times the button is pressed, an additional bar will light, depending on the speed range you set. Each time the "-" button is pressed, a tone will sound and the speed setting will decrease. Every few times the button is pressed, an additional bar will darken. The buttons can be held down to program the segment quickly. After the first speed segment has been programmed, the first incline segment should be programmed. Press the "+" or "-" buttons beneath the PROGRAM INCLINE SEGMENTS display. Each time the "+" button is pressed, a tone will sound and the incline setting will increase. Every few times the button is pressed, an additional bar will light. Each time the "-" button is pressed, a tone will sound and the incline setting will decrease. Every few times the button is pressed, an additional bar will darken.

After the first speed and incline segments have been programmed, press the segment right button beneath either display. The first speed and incline segments will stop flashing, and the second speed and incline segments will begin to flash. The second segments should be programmed in the same manner as the first segments. (Segments can be programmed only when they are flashing.) Continue in this manner until all speed and incline segments have been programmed. You may wish to program the first segments at low settings for a warm-up, the next segments at a combination of higher settings, and the final segments at low settings for a cool-down. The segments can be programmed in an endless variety of "profiles".

The final step in creating a program is to set the length of time the program segments will run. Press the SEGMENT TIME (SET) button beneath the TIME/MAX SPEED SET display. Each program segment is preset to run for 150 seconds (2.5 minutes), as shown in the display. (Since there are eight program segments, the program will run for a total of 20 minutes. This amount will be shown in the TIME/DISTANCE SET display.) If you wish to change the length of time the program segments will run, press the "+" or "-" buttons beneath the TIME/MAX SPEED SET display. Each time one of the buttons is pressed, the time displayed will change by 1.0 second. The buttons can be held down to change the length of time quickly.

The program is now ready to be started. Press the START button. The first segments of the PROGRAM SPEED SEGMENTS and PROGRAM INCLINE SEGMENTS displays will begin to flash, and the treadmill will begin to operate at the first speed and incline settings. Step carefully onto the treadmill belt and begin your workout. The time remaining for the first segments will be shown in the TIME/MAX SPEED SET display. When the time reaches zero, the second segments will begin to flash, and the treadmill will adjust to the second speed and incline settings. The program will continue in this manner until all segments have been completed. The treadmill belt will then slow to a stop, and the incline will remain at the setting of the last segment. Note: The program settings can be changed while the program is running. **If you wish to stop the treadmill belt before the program has ended, press the STOP button.** The console will then be in the same state as if the program had ended.

After the program has ended, the same program can be restarted, a different program can be selected, or the console can be switched to the manual mode by pressing the MANUAL button. The current program settings will be saved in the computer's memory. The settings will be saved as long as the treadmill power cord is plugged in, regardless of whether the power is on or off. If the power cord is unplugged, only the original program settings will be saved.

SELECTING A PRESET PROGRAM

Press the RANDOM, INTERVAL, MOUNTAIN, VALLEY or INCLINE buttons. (Operation of the FITNESS TEST program will be explained later.) The indicator on the button you press will light. Be sure the treadmill belt is fully stopped before you continue.

Next, set a speed range for the program. Press the MAXIMUM SPEED (SET) button beneath the TIME/MAX SPEED SET display. The minimum speed the treadmill belt can move during a program is 1.0 mile per hour. The maximum speed is preset at 2 miles per hour, as shown in the display. The maximum speed can be changed, if desired, by pressing the "+" button beneath the display. Each time the button is pressed, the maximum speed will increase by 0.1 mile per hour. The button can be held down to change the maximum speed quickly. The maximum speed can be set at 2 to 10 miles per hour.

Note: The incline range for all programs is 1.5% to 10%.

The eight speed and incline settings of the selected program will be shown on the PROGRAM SPEED SEGMENTS and PROGRAM INCLINE SEGMENTS displays. If desired, the setting of any segment can be changed. Press the segment right or left buttons beneath either display until the segment you want to change begins to flash. Press the "+" or "-" buttons beneath the appropriate display to change the setting of the segment. Each time the "+" button is pressed, a tone will sound and the setting will increase. Each time the "-" button is pressed, a tone will sound and the setting will decrease. Every few times a button is pressed, an additional bar will light or darken.

Next, set the length of time the program segments will run. Press the SEGMENT TIME (SET) button beneath the TIME/MAX SPEED SET display. Each program segment is preset to run for 150 seconds (2.5 minutes), as shown in the display. (Since there are eight program segments, the program will run for a total of 20 minutes. This amount will be shown in the TIME/DISTANCE SET display.) If you wish to

change the length of time the program segments will run, press the "+" or "-" buttons beneath the TIME/MAX SPEED SET display. Each time one of the buttons is pressed, the time displayed will change by 1.0 second. The buttons can be held down to change the length of time quickly.

The program is now ready to be started. Press the START button. The first segments of the PROGRAM SPEED SEGMENTS and PROGRAM INCLINE SEGMENTS displays will begin to flash, and the treadmill will begin to operate at the first speed and incline settings. Step carefully onto the treadmill belt and begin your workout. The time remaining for the first segments will be shown in the TIME/MAX SPEED SET display. When the time reaches zero, the second segments will begin to flash, and the treadmill will adjust to the second speed and incline settings. The program will continue in this manner until all segments have been completed. The treadmill belt will then slow to a stop, and the incline will remain at the setting of the last segment. Note: The program settings can be changed while the program is running. **If you wish to stop the treadmill belt before the program has ended, press the STOP button.** The console will then be in the same state as if the program had ended.

Although the settings of a preset program can be changed, any changes you make to the settings of the speed segments or incline segments will not be saved in the computer's memory.

SELECTING THE FITNESS TEST PROGRAM

Press the FITNESS TEST button. The indicator on the FITNESS TEST button will light.

Press the WEIGHT SET button beneath the PULSE/CALORIES/FITNESS LEVEL SET display. Press the "+" or "-" buttons in the display to enter your weight, in pounds. Each time one of the buttons is pressed, the weight displayed will change by 1.0 pound. The buttons can be held down to enter your weight quickly. Next, press the FITNESS LEVEL button. (The display will show a zero until the program has started.)

Press the START button to start the program. Step carefully onto the treadmill belt and begin your workout. As you exercise, the speed and incline of the treadmill will gradually increase. When you are exercising as hard as you can **without discomfort**, press the STOP button. Your fitness level will be displayed in the PULSE/CALORIES/FITNESS LEVEL SET display.

SHUTTING THE POWER OFF

Stand on the foot rails. Remove the safety key from the console. Note: **Always remove the safety key when you finish your workout.** The key can be stored in a secure location to prevent unauthorized persons from turning the power on.

MAINTENANCE AND TROUBLE-SHOOTING

Check all parts periodically to ensure that they are tightened securely. Outside surfaces of the treadmill can be cleaned using a soft cloth and mild, non-abrasive detergent. Do not allow liquids to come in contact with the console.

PULSE EARCLIP

If the pulse earclip does not function properly, the earclip should be cleaned. Press the earclip open, and wipe the two clear bubbles inside the earclip using a cotton swab saturated with denatured alcohol.

WALKING BELT ADJUSTMENT

The treadmill belt should always be kept centered on the walking platform. If the belt shifts to the right or left sides of the platform, the belt may be damaged by the roller guard screws. The belt can be adjusted using the rear roller adjustment bolts and the allen wrench included. (The allen wrench can be stored on the frame using the self-adhesive wrench clip.) **CAUTION: ALWAYS TURN THE POWER OFF BEFORE ADJUSTING THE TREADMILL BELT.**

IF THE TREADMILL BELT HAS SHIFTED TO THE LEFT: **TURN THE POWER OFF.** Turn the left adjustment bolt clockwise, and the right adjustment bolt counterclockwise, 1/4 of a turn each. Turn the power on. Repeat as necessary until the belt is centered.

IF THE TREADMILL BELT HAS SHIFTED TO THE RIGHT: **TURN THE POWER OFF.** Turn the left adjustment bolt counterclockwise, and the right adjustment bolt clockwise, 1/4 of a turn each. Turn the power on. Repeat as necessary until the belt is centered.

IF THE TREADMILL BELT SLIPS DURING USE: **TURN THE POWER OFF.** Turn both adjustment bolts clockwise 1/4 of a turn. Turn the power on. Repeat as necessary until the belt does not slip. Be careful not to overtighten the bolts. Overtightening can stretch the belt, cause excessive roller noise, and reduce motor performance.

To check the treadmill belt for proper tension, **TURN THE POWER OFF**, and lift the edges of the treadmill belt. You should be able to lift each edge 2-3 inches off the walking platform. The center of the belt should remain just at the surface of the platform.

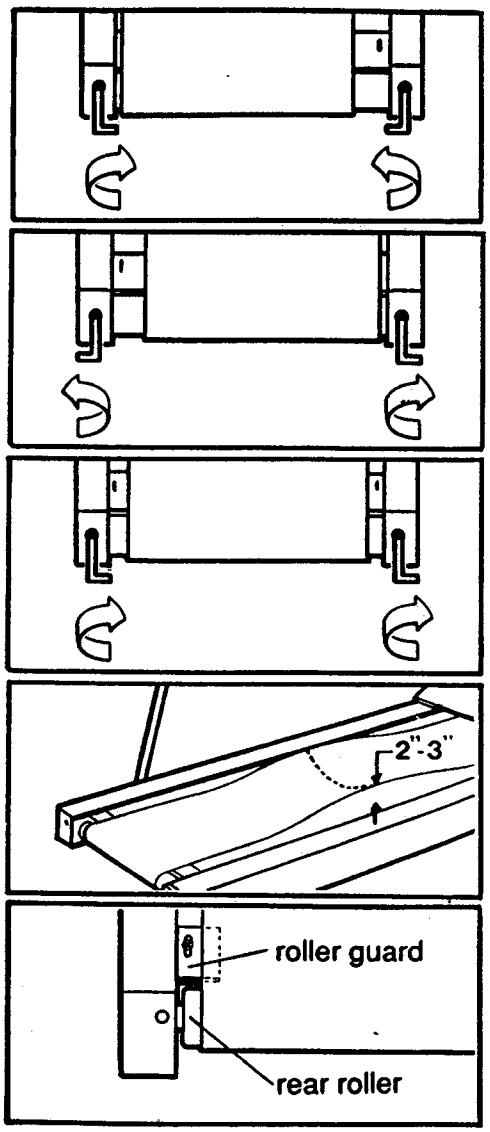

ROLLER GUARD ADJUSTMENT

The rear edge of the roller guards should be 1/8 inch from touching the rear roller. To adjust the roller guards, loosen the screws in the roller guards, slide the roller guards forward or backward, and retighten the screws.

CONSOLE ERRORS

If a console malfunction occurs, an error code may appear on the console. Four backward E's on the MANUAL SPEED ADJUST display indicate a speed sensor error. Two backward E's or a PO on the MANUAL INCLINE ADJUST display indicate an incline sensor error or a power error. If an error code appears, try removing and then reinserting the safety key to solve the problem. If the error code appears again, call our Customer Service Department, toll-free, at 1-800-999-3756, Monday through Friday, 6 a.m. until 6 p.m. Mountain Time. Do not operate the treadmill until the problem is corrected.

STORAGE

Unplug the power cord. Remove the bolt and washers from the lower end of the side rail, and disconnect the side rail. Loosen the lock knob, and lay the upright post on the treadmill belt.

CIRCUIT BREAKER

If the treadmill stops, or will not start, check the circuit breaker located on the front of the frame near the power cord. The circuit breaker is designed to protect the electrical system. If the circuit breaker has tripped, the switch will protrude as shown. Allow the treadmill to cool for a few minutes, and then push the switch back in.

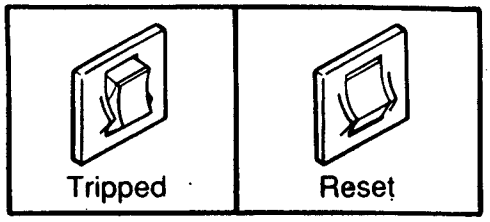

CONDITIONING GUIDELINES

The following guidelines will help you to plan and regulate a personal fitness program. Remember that adequate rest and good nutrition are essential to the success of your fitness program. **Before beginning this or any exercise program, consult your physician.**

EXERCISE INTENSITY

To maximize the benefits of exercising, your level of exertion must exceed mild demands, while falling short of causing breathlessness and fatigue. The proper level of exertion can be found using the heart rate as a guide. For effective aerobic exercise, the heart rate must be maintained at a level between 70% and 85% of your maximum heart rate. This is called your "training zone."

You can find your training zone using the table to the right. Training zones are given for both unconditioned and conditioned persons according to age. Use the column that is appropriate for you.

During the first few weeks of your exercise program, keep your heart rate near the low end of your training zone. Over the course of a few months, gradually increase your heart rate until it is near the high end of your training zone. As your condition improves, a greater workload will be required in order to raise your heart rate to the proper level.

TRAINING ZONES (Beats/Min)		
Age	Unconditioned	Conditioned
20	138-167	133-162
25	136-166	132-160
30	135-164	130-158
35	134-162	129-156
40	132-161	127-155
45	131-159	125-153
50	129-156	124-150
55	127-155	122-149
60	126-153	121-147
65	125-151	119-145
70	123-150	118-144
75	122-147	117-142
80	120-146	115-140
85	118-144	114-139

During the first few weeks of your exercise program, keep your heart rate near the low end of your Training Zone. Over the course of a few months, gradually increase your heart rate until it reaches the high end of your Training Zone. You can measure your heart rate and find the proper level of exercise intensity using the treadmill console. Exercise for at least four minutes, and then measure your heart rate using the pulse mode. If your heart rate is above your training zone, decrease your level of exertion. If your heart rate is too low, increase your level of exertion.

Begin every workout with 5-10 minutes of stretching. Warming up in this manner helps prepare the body for strenuous exercise by increasing circulation, delivering more oxygen to the muscles, and raising body temperature. The warm-up should be followed by 20-30 minutes of exercising with your heart rate in your training zone. Finish every workout with 5-10 minutes of stretching in order to aid circulation, help prevent soreness and increase flexibility. To improve your physical condition, work out in this manner at least 2-3 times per week, allowing a day of rest between workouts. After several months, the number of workouts can be increased to 4-5 per week. The key to success is consistency.

PART LIST - Model No. PF352300

Rev. 4/91

Key No.	Qty.	Description
1	1	Side Rail
2	1	Side Rail Foam Grip
3	1	Clothes Clip
4	1	Pulse Earclip
5	1	Z-Plate
6	1	Console
7	1	Safety Key/Clip
8	7	Console Screw
9	1	Upright Post
10	1	Handrail Bolt
11	1	Cotter Pin
12	1	Handrail
13	1	Upper Lift Motor Pin
14	1	Handrail Foam Grip
15	4	Motor Mount Nut
16	4	Motor Mount Washer
17	1	Motor Connect Wire
18	1	Motor
19	1	Fan
20	1	Flywheel
21	1	Pulley
22	3	Motor Mount Bolt
23	1	Incline Motor
24	1	Lower Lift Motor Pin
25	1	Motor Mnt. Bracket/Shaft
26	21	Screw
27	1	Power Board
28	3	Hood Mount Anchor
29	3	Wire Clip
30	1	Circuit Breaker
31	1	Pivot Nut
32	2	Pivot Washer
33	1	Lock Knob Washer
34	1	Lock Knob
35	1	Pivot Bolt
36	1	Power Cord
37	4	Plastic Stand-Off
38	1	Interface Board
39	2	Pivot Shaft Bolt
40	2	Wheel Bolt
41	2	Front Wheel
42	2	Wheel Nut
43	1	Front Adjustment Bolt
44	3	Adjustment Washer
45	1	Speed Encoder
46	1	J-Bolt
47	1	Grommet
48	1	Belt
49	1	Front Roller/Pulley
50	8	Platform Bolt
51	1	Treadmill Belt
52	2	Incline Leg bolt
53	2	U-Nut
54	1	Incline Leg
55	2	Small Bolt
56	1	Incline Ladder
57	1	Ladder Bolt
58	2	Small Nut
59	2	Photo Interrupter Switch
60	1	Controller
61	1	Bracket
62	1	Walking Platform
63	1	Frame
64	2	Foot Rail
65	2	Rear Leg Endcap
66	1	Right Endcap
67	2	Rear Roller Adjustment Bolt
68	2	Roller Guard
69	1	Rear Roller
70	1	Wrench Clip
71	1	Allen Wrench
72	1	Left Endcap
73	1	Side Rail Endcap
74	1	Side Rail Bolt
75	1	Formed Washer
76	1	Side Rail Washer
77	2	E-Clip
78	4	Hood Screw
79	1	Safety Cover
80	1	Spacer
81	1	Wire Harness
82	1	Motor Hood
83	4	Plate Screw
#	1	Owner's Manual

Note: "#" indicates a non-illustrated part. Specifications are subject to change without notice. See the back cover for information on ordering replacement parts.

EXPLODED DRAWING - Model No. PF352300

Rev. 4/91

Specifications are subject to change without notice.

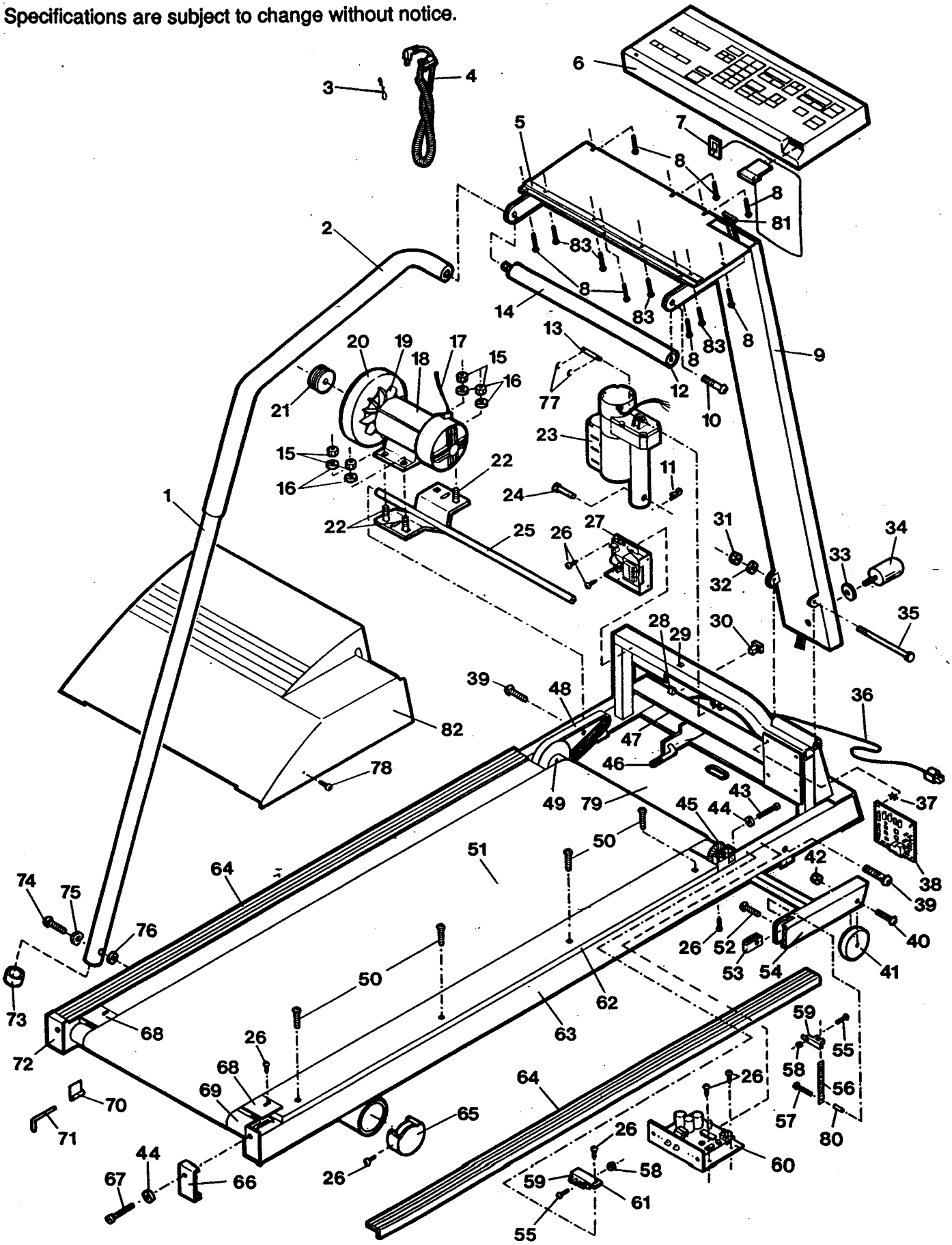

ORDERING REPLACEMENT PARTS

Replacement parts can be ordered by calling our Customer Service Department toll-free at 1-800-999-3756, during our regular business hours: Monday - Friday, 6 a.m. - 6 p.m., Mountain Time. When ordering parts, please be prepared to give the following information:

1. The MODEL NUMBER of the product (PF352300).
2. The NAME of the product (Pro Form 2010 EXL treadmill).
3. The SERIAL NUMBER of the product (see the front cover of this manual).
4. The KEY NUMBER of the part(s) from page 14 of this manual.
5. The DESCRIPTION of the part(s) from page 14 of this manual.

If possible, place the treadmill near your telephone for easy reference when calling.