PRO-FORM®
1100 E

www.proform.com

Model No. PFEL89910.1
Serial No. _____

Write the serial number in the space above for reference.

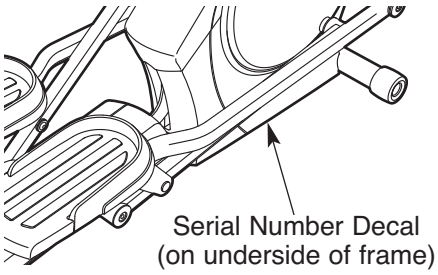

QUESTIONS?

If you have questions, or if parts are damaged or missing, **DO NOT CONTACT THE STORE; please contact Customer Care.**

IMPORTANT: Please register this product (see the limited warranty on the back cover of this manual) before contacting Customer Care.

CALL TOLL-FREE:
1-888-533-1333
Mon.–Fri. 6 a.m.–6 p.m. MT
Sat. 8 a.m.–4 p.m. MT

ON THE WEB:
www.proformservice.com

⚠ CAUTION

Read all precautions and instructions in this manual before using this equipment. Keep this manual for future reference.

USER'S MANUAL

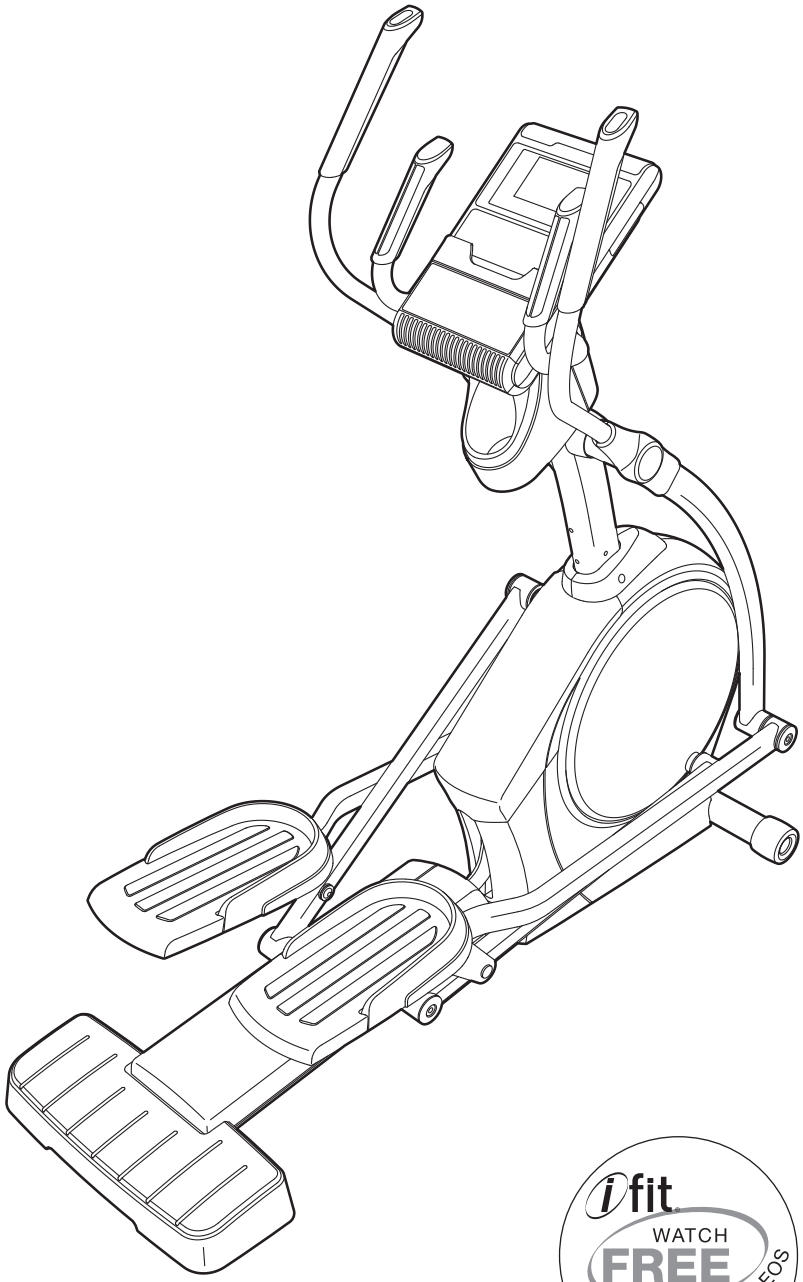

ifit
WATCH
FREE
WORKOUT VIDEOS
ifit.com

TABLE OF CONTENTS

WARNING DECAL PLACEMENT 2
IMPORTANT PRECAUTIONS 3
BEFORE YOU BEGIN 4
ASSEMBLY 5
HOW TO USE THE ELLIPTICAL 13
MAINTENANCE AND TROUBLESHOOTING 20
EXERCISE GUIDELINES 22
PART LIST 23
EXPLODED DRAWING 25
ORDERING REPLACEMENT PARTS . . . . . Back Cover
LIMITED WARRANTY . . . . . Back Cover

WARNING DECAL PLACEMENT

This drawing shows the location(s) of the warning decal(s). **If a decal is missing or illegible, see the front cover of this manual and request a free replacement decal. Apply the decal in the location shown.** Note: The decal(s) may not be shown at actual size.

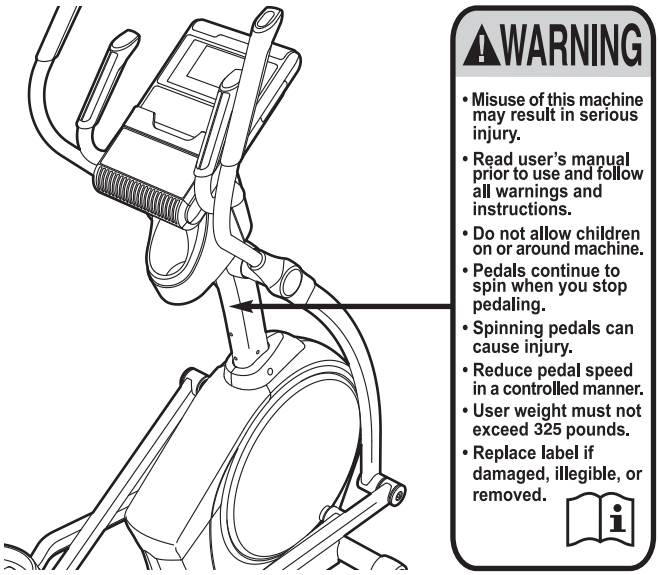

PROFORM is a registered trademark of ICON IP, Inc.

IMPORTANT PRECAUTIONS

⚠ WARNING: To reduce the risk of serious injury, read all important precautions and instructions in this manual and all warnings on your elliptical before using your elliptical. ICON assumes no responsibility for personal injury or property damage sustained by or through the use of this product.

1. **Before beginning any exercise program, consult your physician. This is especially important for persons over age 35 or persons with pre-existing health problems.**
2. **Use the elliptical only as described in this manual.**
3. **It is the responsibility of the owner to ensure that all users of the elliptical are adequately informed of all precautions.**
4. **The elliptical is intended for home use only. Do not use the elliptical in a commercial, rental, or institutional setting.**
5. **Keep the elliptical indoors, away from moisture and dust. Do not put the elliptical in a garage or covered patio, or near water.**
6. **Place the elliptical on a level surface, with at least 3 ft. (0.9 m) of clearance in the front and rear of the elliptical and 2 ft. (0.6 m) on each side. To protect the floor or carpet from damage, place a mat under the elliptical.**
7. **Inspect and properly tighten all parts regularly. Replace any worn parts immediately.**
8. **Keep children under age 12 and pets away from the elliptical at all times.**
9. **The elliptical should not be used by persons weighing more than 325 lbs. (147 kg).**
10. **Wear appropriate clothes while exercising; do not wear loose clothes that could become caught on the elliptical. Always wear athletic shoes for foot protection while exercising.**
11. **Hold the handlebars or the upper body arms when mounting, dismounting, or using the elliptical.**
12. **The pulse sensor is not a medical device. Various factors may affect the accuracy of heart rate readings. The pulse sensor is intended only as an exercise aid in determining heart rate trends in general.**
13. **The elliptical does not have a freewheel; the pedals will continue to move until the flywheel stops. Reduce your pedaling speed in a controlled way.**
14. **Keep your back straight while using the elliptical; do not arch your back.**
15. **Over exercising may result in serious injury or death. If you feel faint or if you experience pain while exercising, stop immediately and cool down.**

BEFORE YOU BEGIN

Thank you for selecting the revolutionary PROFORM® 1100 E elliptical. The 1100 E elliptical provides an impressive selection of features designed to make your workouts at home more effective and enjoyable.

For your benefit, read this manual carefully before you use the elliptical. If you have questions after reading this manual, please see the front cover of this manual. To help us assist you, note the product model number and serial number before contacting us. The model number and the location of the serial number decal are shown on the front cover of this manual.

Before reading further, please familiarize yourself with the parts that are labeled in the drawing below.

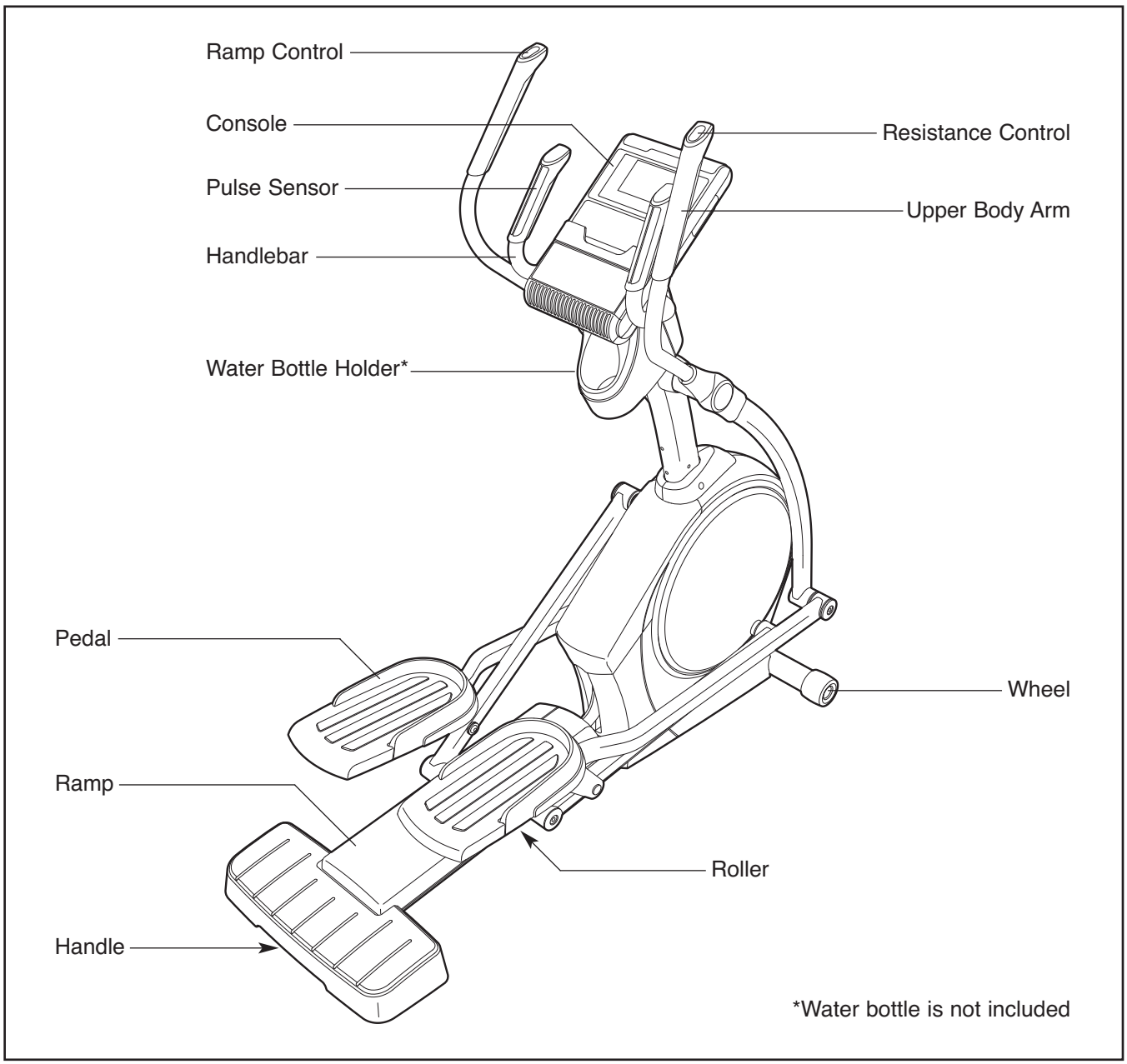

ASSEMBLY

Assembly requires two persons. Place all parts of the elliptical in a cleared area and remove the packing materials. Do not dispose of the packing materials until assembly is completed.

In addition to the included tool(s), assembly requires a Phillips screwdriver , two adjustable wrenches , and a rubber mallet .

See the drawings below to identify the small parts needed for assembly. The number in parentheses below each drawing is the key number of the part, from the PART LIST near the end of this manual. The number following the key number is the quantity needed for assembly. **Note: If a part is not in the hardware kit, check to see if it has been preassembled. To avoid damaging parts, do not use power tools for assembly.**

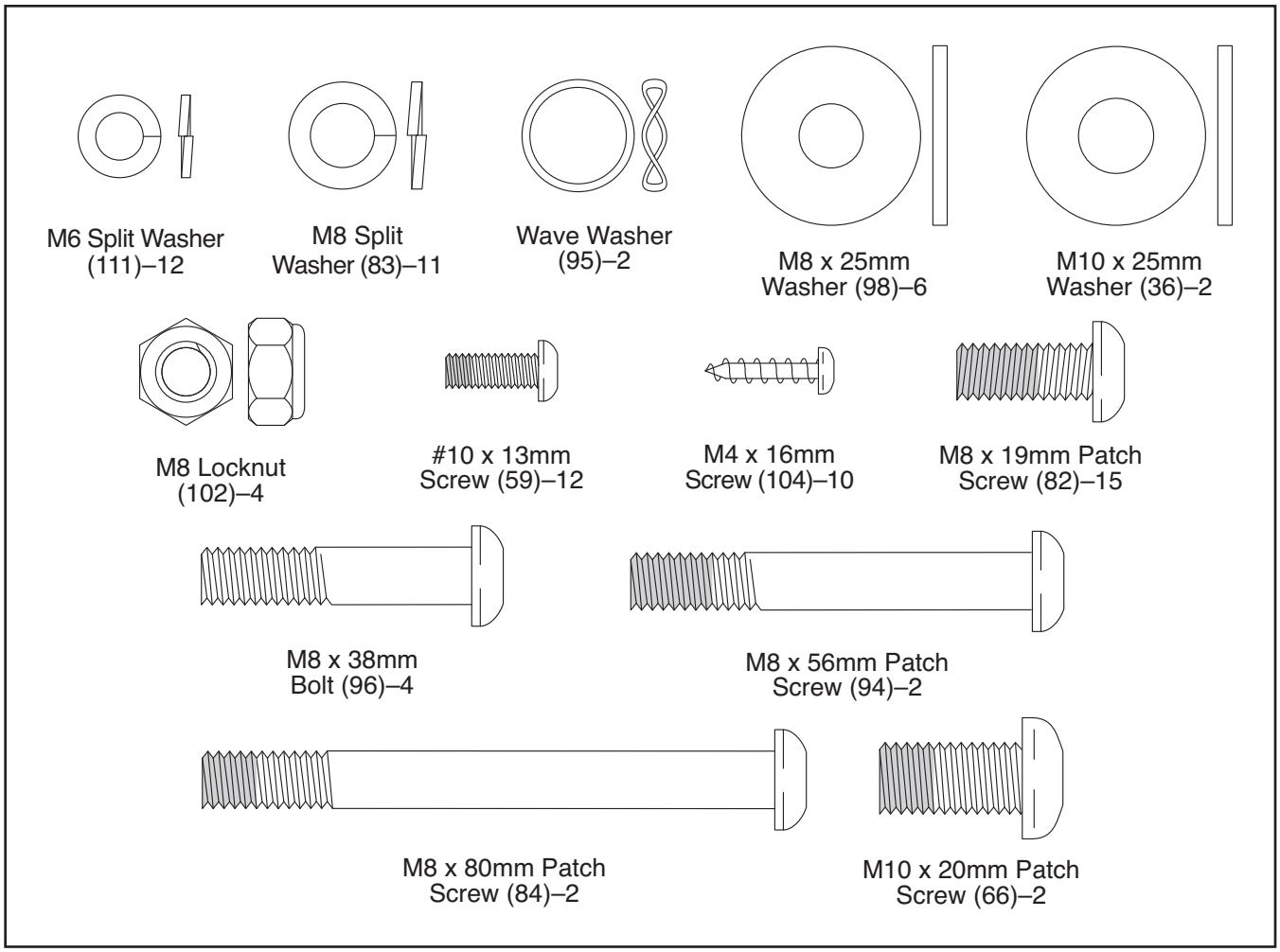

1. **To make assembly easier, read the information on page 5 before you begin.**

Attach the Front Stabilizer (6) to the Front Frame (1) with two M8 x 80mm Patch Screws (84).

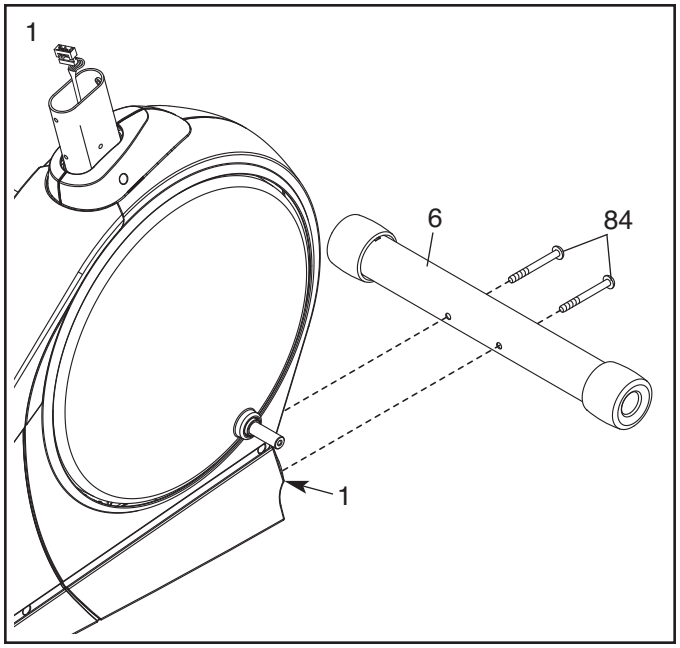

2. Orient the Rear Stabilizer (62) and the Rear Frame (2) as shown.

Tip: If the Ramp Cover (see step 15) is attached to the Ramp (3), remove the Ramp Cover.

Attach the Rear Stabilizer (62) to the Rear Frame (2) with two M8 x 56mm Patch Screws (94) and two M8 Split Washers (83).

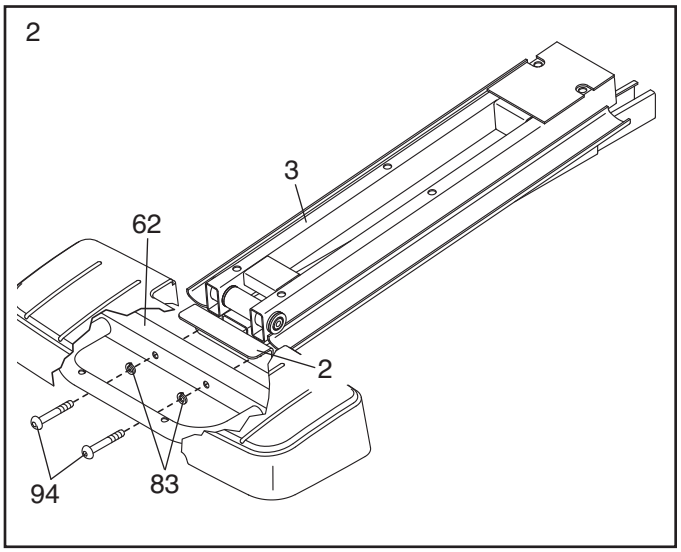

3. Insert the Rear Frame (2) into the Front Frame (1); **make sure that the Ramp (3) is on the Lift Roller (12).**

   Attach the Rear Frame (2) with five M8 x 19mm Patch Screws (82) and five M8 Split Washers (83).

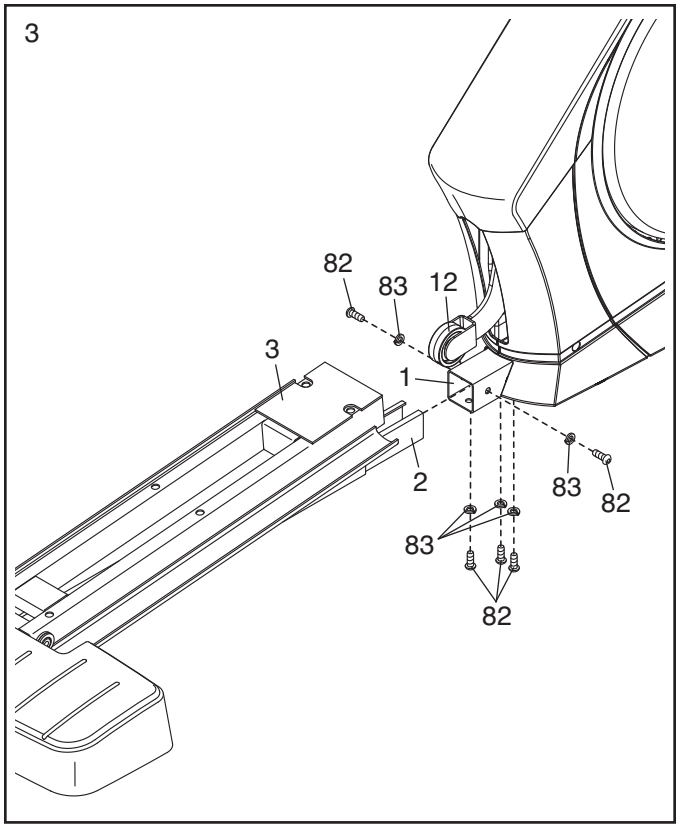

4. Have a second person orient the Upright (4) as shown and hold it near the Front Frame (1).

   Locate the wire tie in the Upright (4). Tie the lower end of the wire tie to the Wire Harness (110). Next, pull the upper end of the wire tie until the Wire Harness is routed completely through the Upright. Then, untie and discard the wire tie.

   Tip: To prevent the Wire Harness (110) from falling into the Upright (4), secure the Wire Harness with a rubber band or tape.

   Tip: Avoid pinching the Wire Harness (110). Slide the Upright (4) onto the Front Frame (1).

   Attach the Upright (4) with four M8 x 19mm Patch Screws (82) and four M8 Split Washers (83); **do not tighten the Patch Screws yet.**

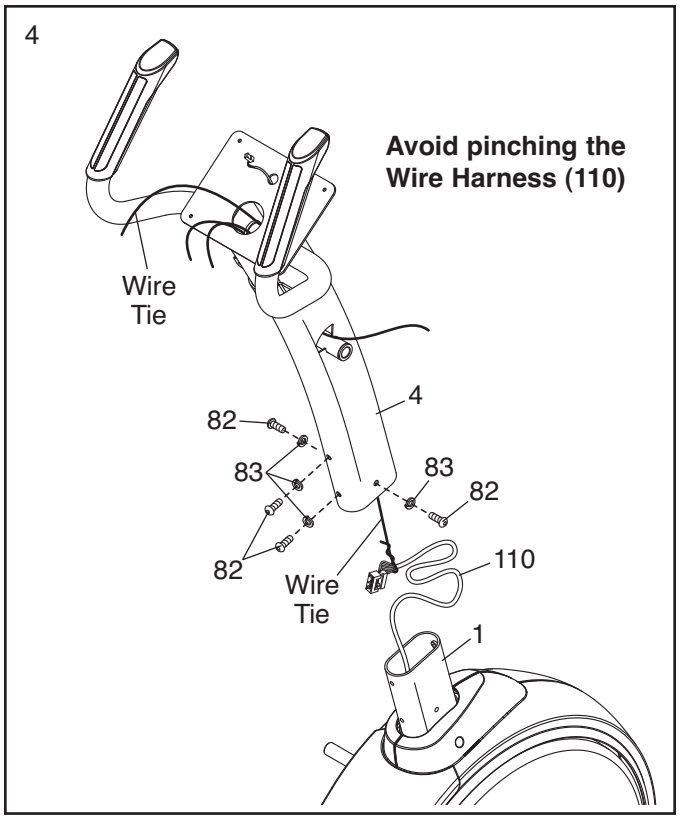

5. Apply a generous amount of grease to the Pivot Axle (35) and to two Wave Washers (95).

   Insert the Pivot Axle (35) through the Upright (4) and then center it.

   Slide a Wave Washer (95) onto each end of the Pivot Axle (35).

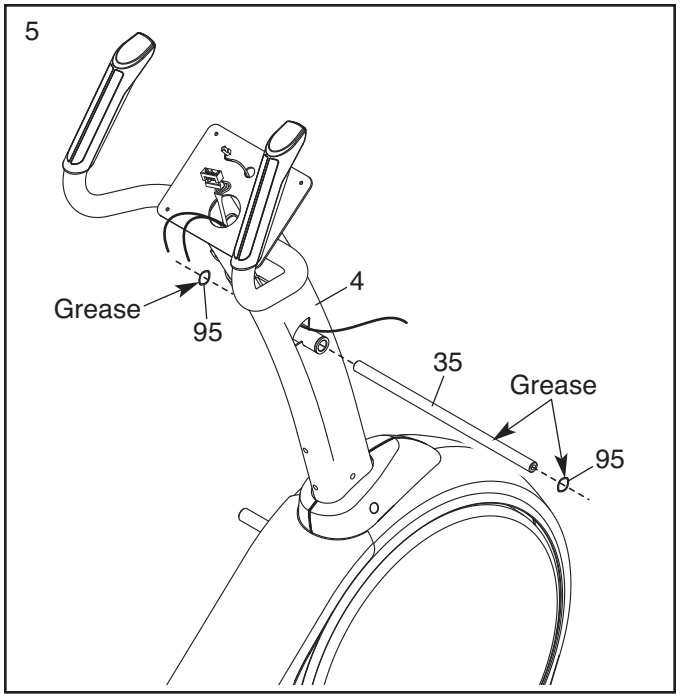

6. Identify the Right Upper Body Arm (61) and the Right Upper Body Leg (60), which are marked with “Right” stickers, and orient them as shown. **Make sure that the hexagonal holes are in the position shown.**

   Have a second person hold the Right Upper Body Arm (61) near the Right Upper Body Leg (60).

   Locate the wire tie in the Right Upper Body Leg (60). Tie the upper end of the wire tie to the Right Control Wire (41) located in the Right Upper Body Arm (61) **(see the inset drawing).**

   Next, pull the lower end of the wire tie until the Right Control Wire (41) is routed through the Right Upper Body Leg (60). Then, untie and discard the wire tie.

   Tip: Avoid pinching the Right Control Wire (41). Slide the Right Upper Body Arm (61) onto the Right Upper Body Leg (60). Attach the Right Upper Body Arm with two M8 x 38mm Bolts (96) and two M8 Locknuts (102). **Make sure that the Locknuts are in the hexagonal holes.**

   Repeat this step for the Left Upper Body Arm (not shown) and the Left Upper Body Leg (not shown).

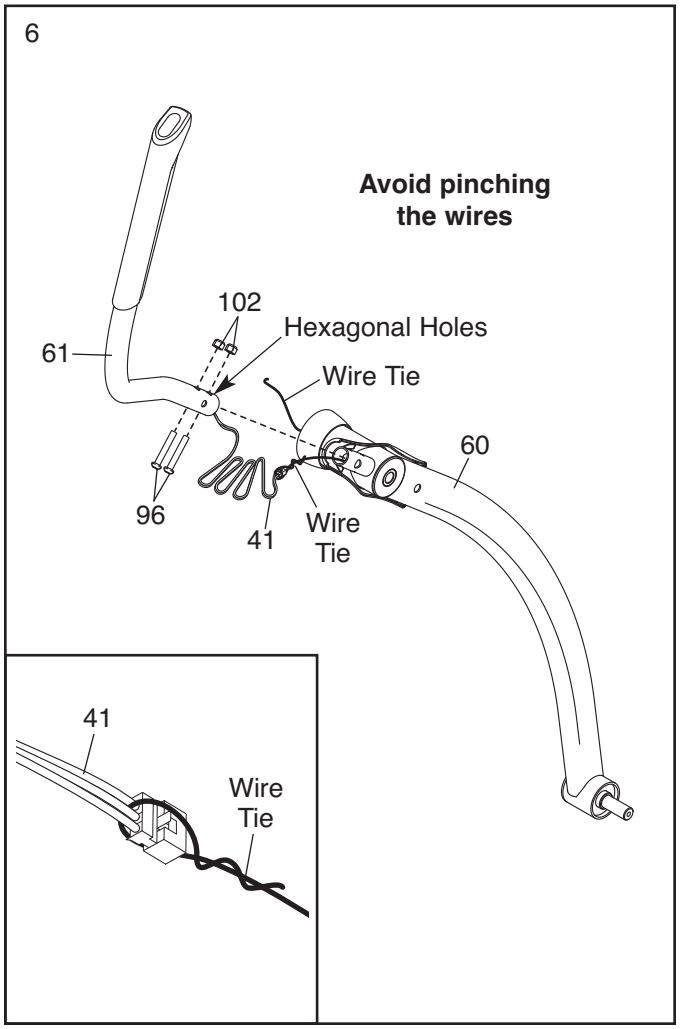

7. Have a second person hold the Right Upper Body Leg (60) near the right side of the Upright (4).

   Locate the wire tie in the right side of the Upright (4). Tie the wire tie to the Right Control Wire (41) in the Right Upper Body Leg (60).

   Tip: Do not pinch the Right Control Wire (41). Pull the upper end of the wire tie until the Right Control Wire is routed through the Upright (4). At the same time, slide the Right Upper Body Leg (60) onto the Pivot Axle (35); **make sure that the right Upper Body Leg is in front of the right Crank Arm (20).** Then, untie and discard the wire tie.

   Tip: To prevent the Right Control Wire (41) from falling into the Upright (4), secure the Right Control Wire with a rubber band or tape.

   Attach the Right Upper Body Leg (60) with an M8 x 19mm Patch Screw (82) and an M8 x 25mm Washer (98).

   Repeat this step on the other side of the elliptical.

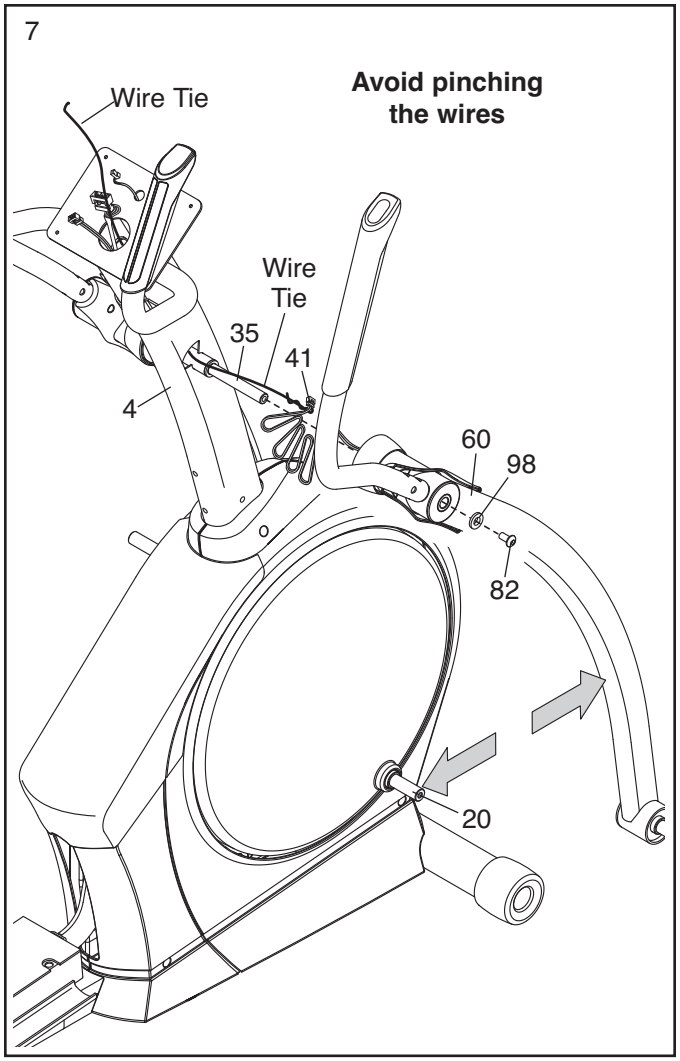

8. Attach an Outer Cover (67) to the Inner Cover (68) on the Right Upper Body Leg (60) with two M4 x 16mm Screws (104).

   Repeat this step on the other side of the elliptical.

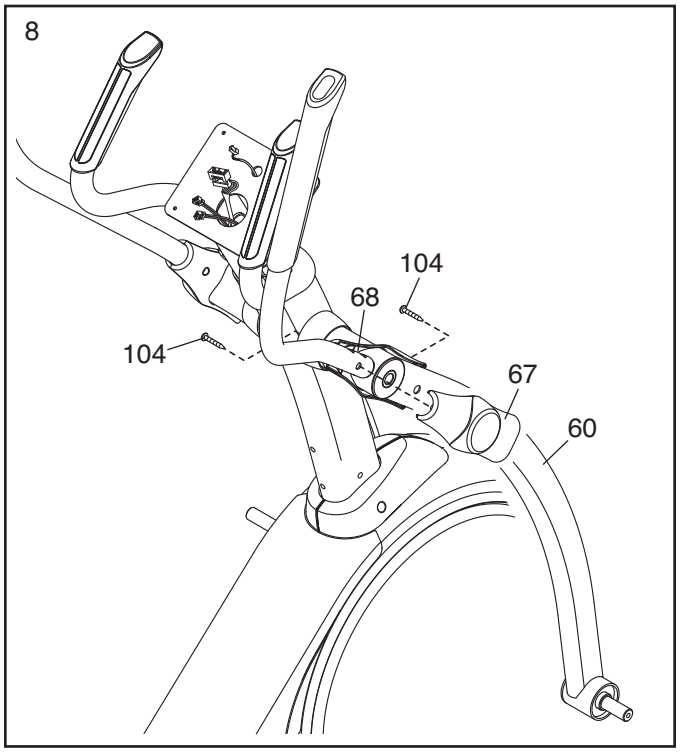

9. Have a second person hold the Console (7) near the Upright (4).

   Connect the wires on the Console (7) to the Wire Harness (110), to the Pulse Wire (63), and to the Right and Left Control Wires (41, 48). **Make sure to connect the console wire that has a tag to the Control Wire that has a tag.**

   Insert the excess Pulse Wire (63) upward into the Console (7) while inserting the other wires downward into the Upright (4).

   Tip: Avoid pinching the wires. Attach the Console (7) to the Upright (4) with four M4 x 16mm Screws (104).

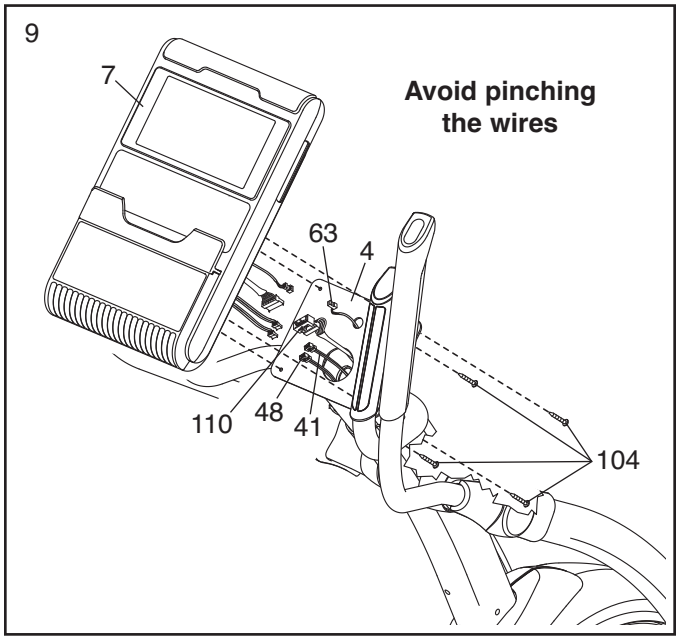

10. Orient the Rear Upright Cover (80) as shown.

    Attach the Rear Upright Cover (80) to the Upright (4) with two M4 x 16mm Screws (104).

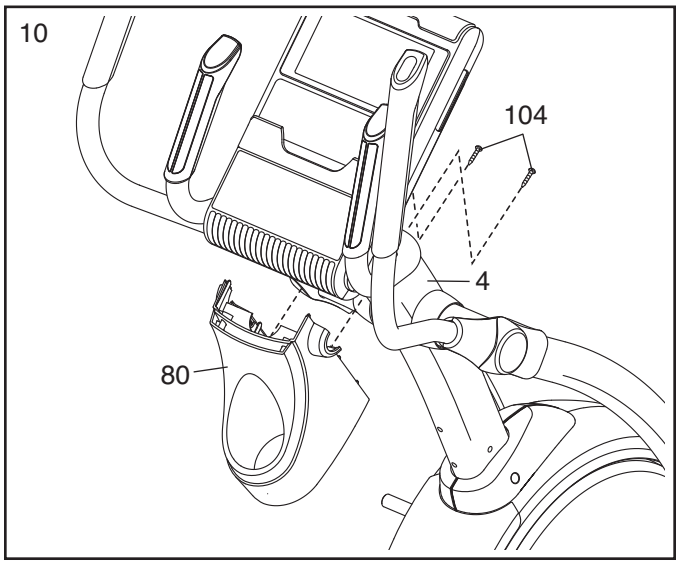

11. Orient the Front Upright Cover (91) as shown.

    Attach the Front Upright Cover (91) around the Upright (4) by pressing the tabs on the Front Upright Cover into the Rear Upright Cover (80).

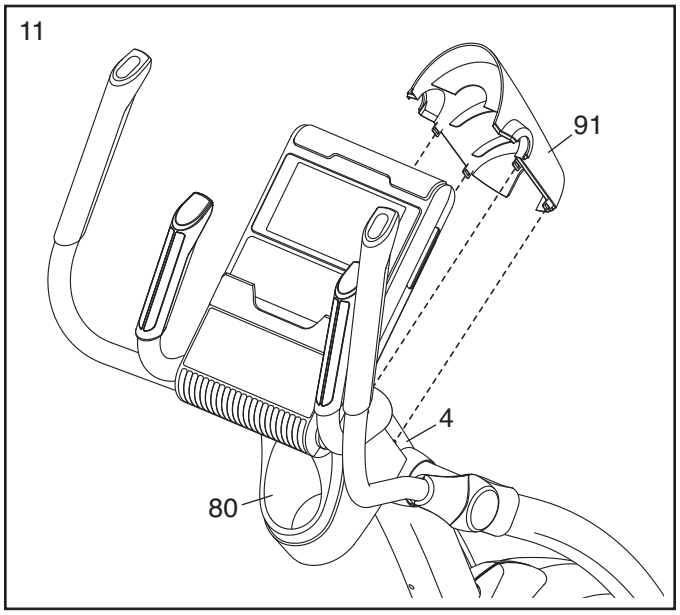

12. Apply a small amount of grease to the right Crank Arm (20).

Orient a Roller Arm (45) so that the Roller (51) is in the position shown.

Slide the Roller Arm (45) onto the right Crank Arm (20) while setting the Roller (51) on the Ramp (3).

Attach the Roller Arm (45) with an M8 x 19mm Patch Screw (82), an Axle Cover (53), and an M8 x 25mm Washer (98); **to avoid breaking the Axle Cover, do not overtighten the Patch Screw.**

Repeat this step on the other side of the elliptical.

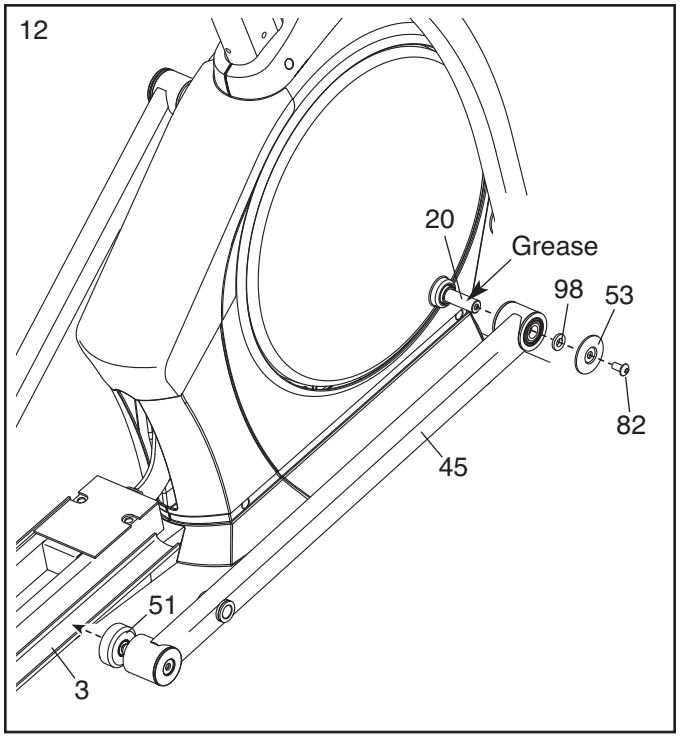

13. Identify the Right Pedal Arm (58), which is marked with a “Right” sticker, and orient it as shown.

Then, orient a Pedal (49) as shown.

Attach the Pedal (49) to the Right Pedal Arm (58) with six #10 x 13mm Screws (59) and six M6 Split Washers (111).

Attach the other Pedal (not shown) to the Left Pedal Arm (not shown) in the same way.

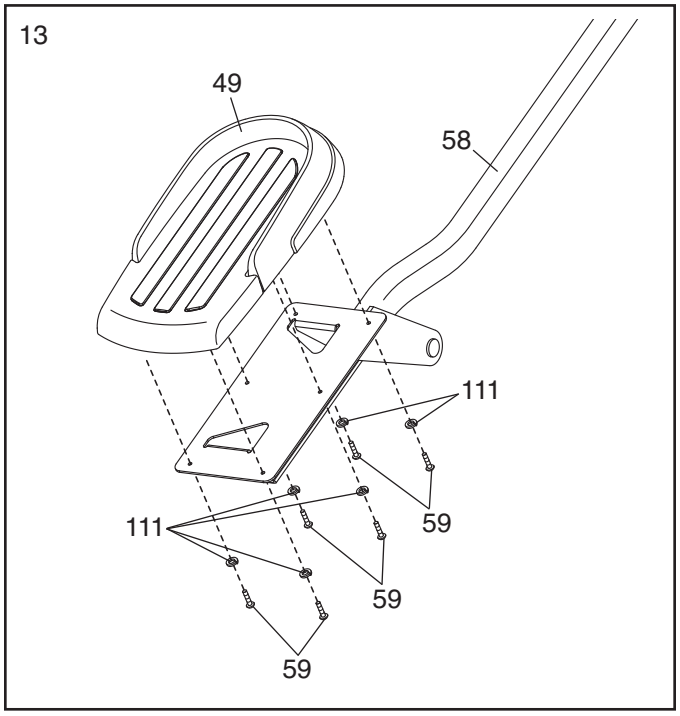

14. **See the upper drawing.** Apply a small amount of grease to the axle on the Right Upper Body Leg (60) and to the axle on the Right Pedal Arm (58).

    Orient the Right Pedal Arm (58) as shown. Slide the Right Pedal Arm onto the Right Upper Body Leg (60) and into the right Roller Arm (45) at the same time.

    Attach the Right Pedal Arm (58) to the Right Upper Body Leg (60) with an M8 x 19mm Patch Screw (82), an Axle Cover (53), and an M8 x 25mm Washer (98); **to avoid breaking the Axle Cover, do not overtighten the Patch Screw.**

    See the lower drawing. Attach the right Roller Arm (45) to the Right Pedal Arm (58) with an M10 x 20mm Patch Screw (66) and an M10 x 25mm Washer (36).

    Attach the Left Pedal Arm (44) to the Left Upper Body Leg (not shown) and the left Roller Arm (45) in the same way.

    See step 4. Tighten the four M8 x 19mm Patch Screws (82).

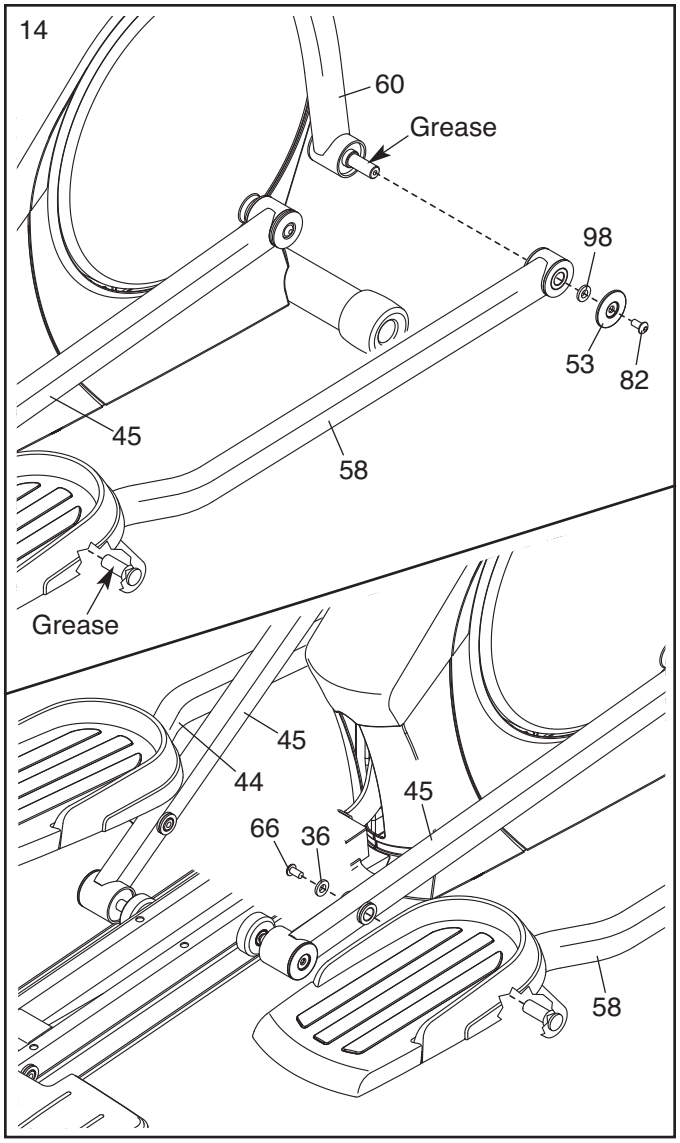

15. Orient the Ramp Cover (10) as shown.

    Align the mounts on the Ramp Cover (10) with the holes in the Ramp (3). Then, press the Ramp Cover (10) into the Ramp.

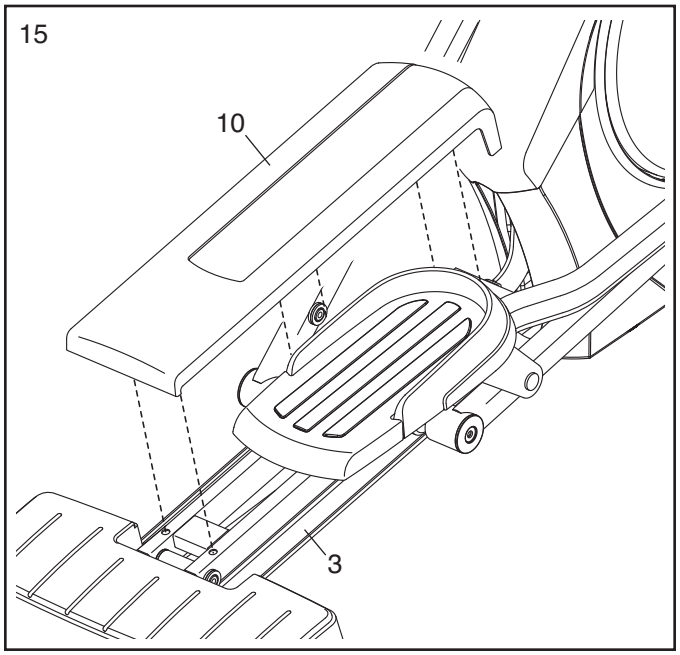

16. **Make sure that all parts are properly tightened before you use the elliptical.** Note: After assembly is completed, some extra parts may be left over. Place a mat beneath the elliptical to protect the floor.

HOW TO USE THE ELLIPTICAL

HOW TO PLUG IN THE POWER CORD

This product must be grounded. If it should malfunction or break down, grounding provides a path of least resistance for electric current to reduce the risk of electric shock. This product is equipped with a cord having an equipment-grounding conductor and a grounding plug.

Plug the power cord into an appropriate outlet that is properly installed and grounded in accordance with all local codes and ordinances. This product is for use on a nominal 120-volt circuit. IMPORTANT: The elliptical is not compatible with GFCI-equipped outlets.

⚠DANGER: Improper connection of the equipment-grounding conductor can result in an increased risk of electric shock. Check with a qualified electrician or serviceman if you are in doubt as to whether the product is properly grounded. Do not modify the plug provided with the product—if it will not fit the outlet, have a proper outlet installed by a qualified electrician.

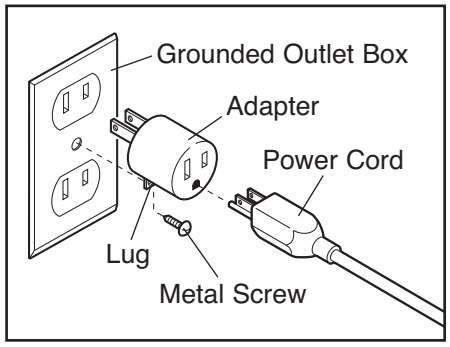

A temporary adapter may be used to connect the power cord to a 2-pole receptacle as shown at the right if a properly grounded outlet is not available. The temporary adapter should be used only until a properly grounded outlet can be installed by a qualified electrician.

The green-colored rigid ear, lug, or the like extending from the adapter must be connected to a permanent ground such as a properly grounded outlet box cover. Whenever the adapter is used, it must be held in place by a metal screw. **Some 2-pole receptacle outlet box covers are not grounded. Contact a qualified electrician to determine if the outlet box cover is grounded before using an adapter.**

HOW TO MOVE THE ELLIPTICAL

Due to the size and weight of the elliptical, moving it requires two persons. Stand in front of the elliptical, hold the upright, and place one foot against one of the front wheels. Pull on the upright and have a second person lift the handle at the rear until the elliptical will roll on the front wheels. Carefully move the elliptical to the desired location, and then lower it to the floor.

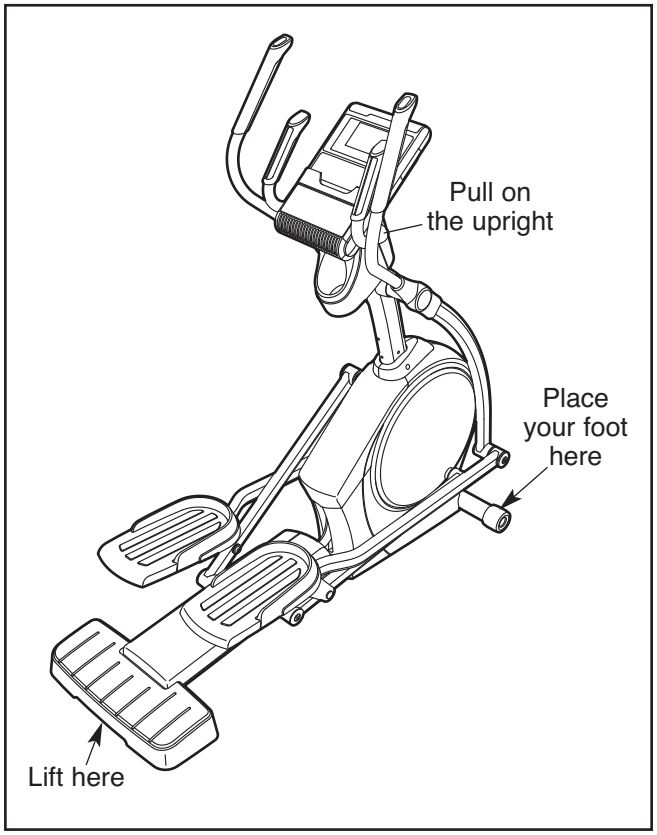

HOW TO EXERCISE ON THE ELLIPTICAL

To mount the elliptical, hold the upper body arms and step onto the pedal that is in the lower position. Then, step onto the other pedal. Push the pedals until they begin to move with a continuous motion. **Note: The discs can turn in either direction. It is recommended that you turn the discs in the direction shown by the arrow; however, for variety, you can turn the discs in the opposite direction.**

To dismount the elliptical, wait until the pedals come to a complete stop. **Note: The elliptical does not have a free wheel; the pedals will continue to move until the flywheel stops.** When the pedals are stationary, step off the higher pedal first. Then, step off the lower pedal.

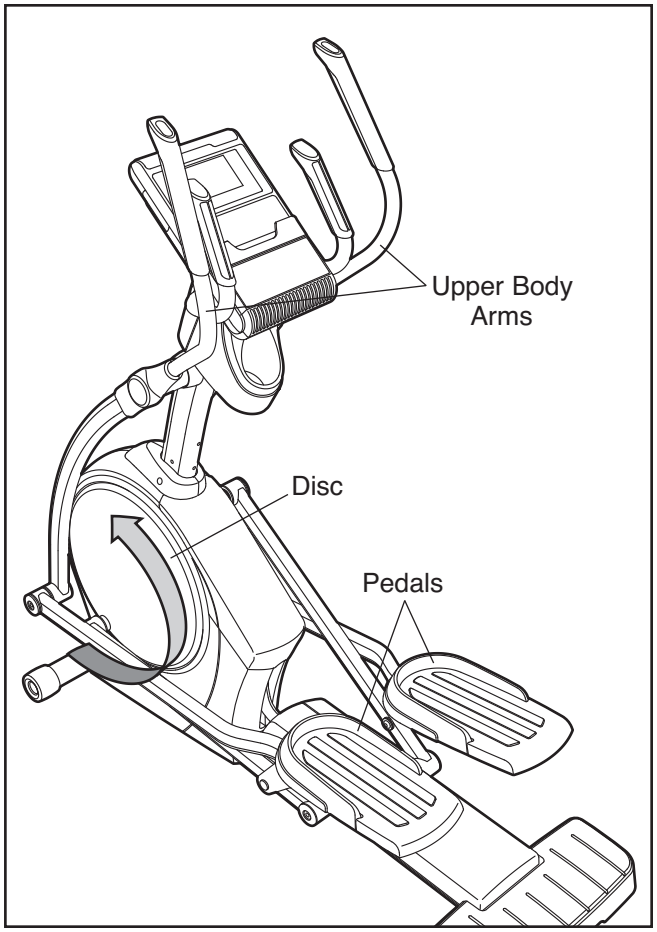

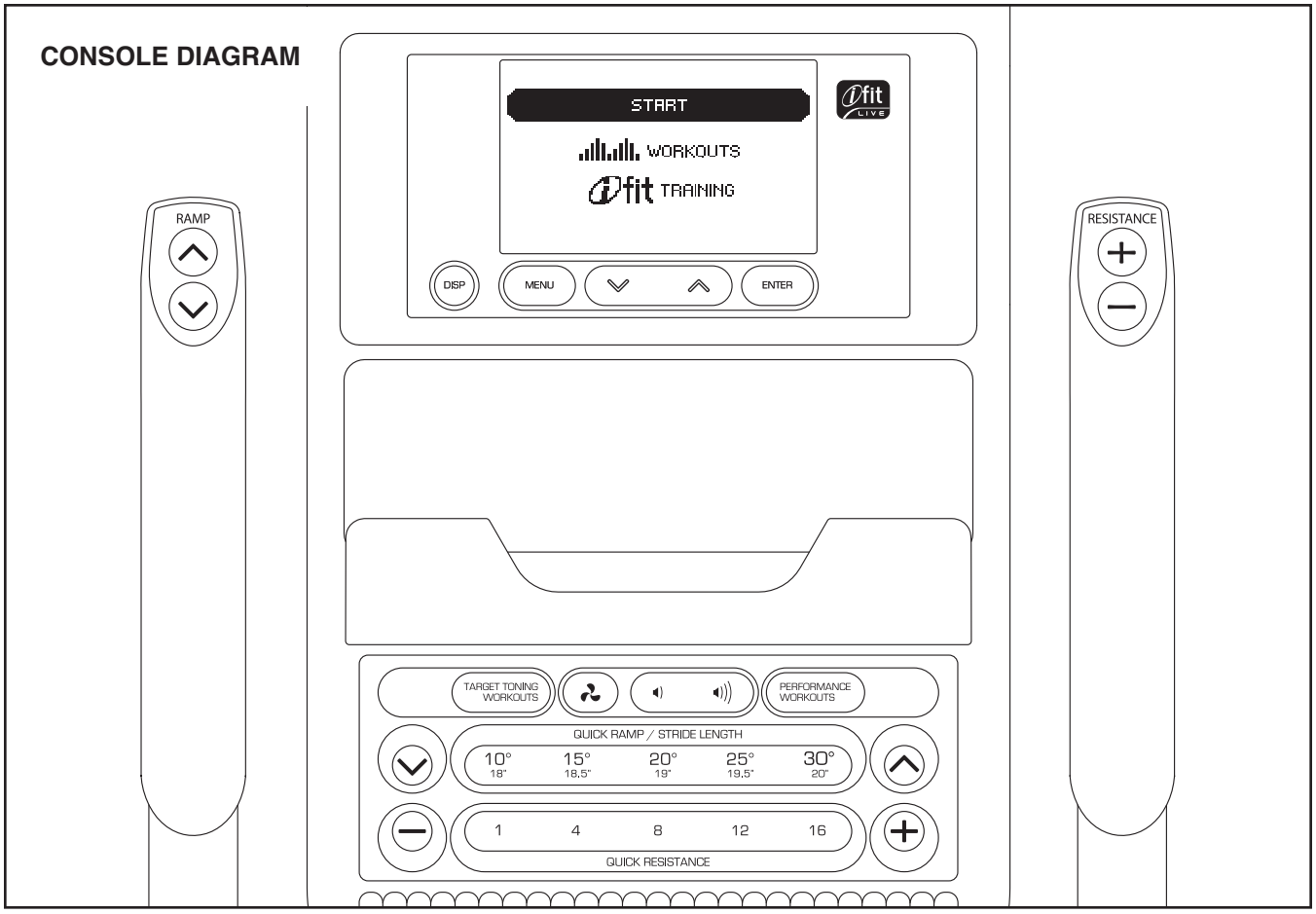

FEATURES OF THE CONSOLE

The advanced console offers an array of features designed to make your workouts more effective and enjoyable.

When you use the manual mode of the console, you can change the resistance of the pedals and the incline of the ramp with the touch of a button. While you exercise, the console will display continuous exercise feedback. You can also measure your heart rate using the handgrip pulse sensor.

The console offers twenty preset workouts—ten target toning workouts and ten performance workouts. Each workout automatically changes the resistance of the pedals and the incline of the ramp and prompts you to vary your pedaling pace as it guides you through an effective workout.

The console also features an iFit training mode that allows you to connect the elliptical to your wireless network through an iFit Live module. The optional iFit Live module allows you to download personalized workouts and to track and analyze workout information on the iFit Live website. **To purchase an iFit Live module at any time, go to www. iFit.com or call the telephone number on the front cover of this manual.**

You can even connect your MP3 player or CD player to the console sound system and listen to your favorite music or audio books while you exercise.

To turn on the power, see page 16. **To use the manual mode,** see page 16. **To use a preset workout,** see page 18. **To use the iFit training mode,** see page 19. **To use the sound system,** see page 19. **To use the information mode,** see page 19.

Note: If there is a sheet of plastic on the display, remove the plastic.

HOW TO TURN ON THE POWER

IMPORTANT: If the elliptical has been exposed to cold temperatures, allow it to warm to room temperature before turning on the power. If you do not do this, you may damage the console displays or other electrical components.

Plug in the power cord (see HOW TO PLUG IN THE POWER CORD on page 13). Next, locate the power switch on the frame near the power cord. Make sure that the power switch is in the reset position.

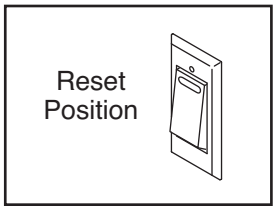

The display will then light and the console will be ready for use.

HOW TO USE THE MANUAL MODE

1. **Begin pedaling or press any button on the console to turn on the console.**

   See HOW TO TURN ON THE POWER above.

2. **Select the manual mode.**

   Each time you turn on the console, the main menu will appear.

   To select the manual mode, press the Increase and Decrease buttons next to the Enter button and highlight START. Then, press the Enter button.

   If you have selected a workout or the iFit Training mode, press the Menu button to return to the main menu.

3. **Change the resistance of the pedals and the incline of the ramp as desired.**

   As you pedal, change the resistance of the pedals by pressing one of the numbered Quick Resistance buttons or by pressing the Quick Resistance Increase and Decrease buttons located on the console or on the right upper body arm.

   Note: After you press the buttons, it will take a moment for the pedals to reach the selected resistance level.

   To vary the motion of the pedals, you can change the incline of the ramp. To change the incline, press one of the numbered Quick Ramp buttons or press the Quick Ramp Increase and Decrease buttons located on the console or on the left upper body arm.

   Note: After you press the buttons, it will take a moment for the ramp to reach the selected incline level.

4. **Follow your progress with the display.**

   The console offers several display modes. The display mode that you select will determine which workout information is shown. Press the Display (Disp) button repeatedly to select the desired display mode.

   The display can show the following workout information:

   Calories—This display mode will show the approximate number of calories you have burned.

   Profile—When a workout is selected, this display mode will show a profile of the resistance levels for the workout.

   Pulse—This display mode will show your heart rate when you use the handgrip pulse sensor (see step 5 on page 17).

   Ramp—This display mode will show the incline level of the ramp for a few seconds each time the ramp incline changes.

   Resistance—This display mode will show the resistance level of the pedals for a few seconds each time the resistance level changes.

   RPM—This display mode will show your pedaling pace, in revolutions per minute (rpm).

   Strides—This display mode will show the total number of strides you have pedaled.

   Time—When the manual mode is selected, this display mode will show the elapsed time. When a workout is selected, the display mode will show the time remaining in the workout instead of the elapsed time.

   Change the volume level of the console by pressing the Volume Increase and Decrease buttons.

5. **Measure your heart rate if desired.**

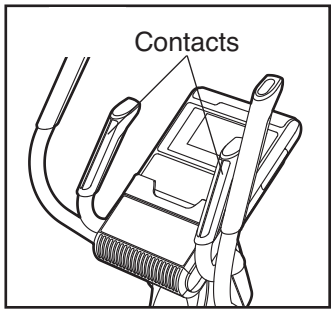

If there are sheets of plastic on the metal contacts on the handgrip pulse sensor, remove the plastic. To measure your heart rate, hold the handgrip pulse sensor with your palms resting against the metal contacts. **Avoid moving your hands or gripping the contacts tightly.**

When your pulse is detected, your heart rate will appear in the display. For the most accurate heart rate reading, hold the contacts for at least 15 seconds.

If the display does not show your heart rate, make sure that your hands are positioned as described. Be careful not to move your hands excessively or squeeze the metal contacts tightly. For optimal performance, clean the metal contacts using a soft cloth; **never use alcohol, abrasives, or chemicals to clean the contacts.**

6. **Turn on the fan if desired.**

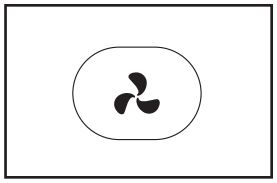

The fan has high and low speed settings. Press the Fan button repeatedly to select a fan speed or to turn off the fan.

7. **When you are finished exercising, unplug the power cord.**

If the pedals do not move for several seconds, a tone will sound and the console will pause.

If the pedals do not move for several minutes and the buttons are not pressed, the console will turn off and the display will be reset.

When you are finished exercising, press the power switch to the off position and unplug the power cord. **IMPORTANT: If you do not do this, the electrical components on the elliptical may wear prematurely.**

HOW TO USE A PRESET WORKOUT

1. **Begin pedaling or press any button on the console to turn on the console.**

   See HOW TO TURN ON THE POWER on page 16.

2. **Select a preset workout.**

   If you have selected a workout or the iFit Training mode, press the Menu button to return to the main menu.

   To select a preset workout, first press the Increase and Decrease buttons next to the Enter button and highlight WORKOUTS. Then, press the Enter button.

   Next, press the Increase and Decrease buttons to highlight the desired workout category. Then, press the Enter button.

   You can also press the Target Toning Workouts button or the Performance Workouts button.

   Press the Increase and Decrease buttons to highlight the desired workout category. Then, press the Enter button.

   Press the Increase and Decrease buttons to highlight the name of the desired workout. The duration, the maximum rpm (pedaling pace), the maximum resistance level, the maximum ramp level, and a profile of the resistance levels of the workout will appear in the right side of the display. Then, press the Enter button.

3. **Begin pedaling to start the workout.**

   Each workout is divided into one-minute segments. One resistance level, one ramp incline, and one target rpm (pedaling pace) are programmed for each segment. Note: The same resistance level, ramp incline, and/or target rpm may be programmed for consecutive segments.

   The workout profile will show your progress. The flashing segment of the profile represents the current segment of the workout. The height of the flashing segment indicates the resistance level for the current segment.

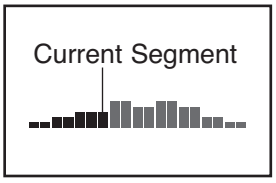

   When the first segment of the workout ends, the resistance level, ramp incline, and the target rpm for the second segment will appear in the display for a few seconds to alert you. The next segment of the profile will begin to flash, and the pedals will automatically adjust to the resistance level and the ramp incline for the next segment.

   As you exercise, you will be prompted to keep your pedaling pace (rpm) near the target rpm for the current segment. When the word FASTER appears in the display, increase your pedaling pace. When the word SLOWER appears, decrease your pedaling pace. When no words appear, maintain your current pedaling pace.

   IMPORTANT: The target rpm is intended only to provide motivation. Your actual pedaling pace (rpm) may be slower than the target rpm. Make sure to pedal at a pace that is comfortable for you.

   If the resistance level or the ramp incline for the current segment is too high or too low, you can manually override the setting by pressing the Quick Resistance buttons and the Quick Ramp buttons. **IMPORTANT: When the current segment of the workout ends, the pedals will automatically adjust to the resistance level or the ramp incline for the next segment.**

   The workout will continue in this way until the last segment ends. To stop the workout at any time, stop pedaling. A tone will sound and the time will begin to flash in the display. To restart the workout, simply resume pedaling.

4. **Follow your progress with the display.**

   See step 4 on page 16.

5. **Measure your heart rate if desired.**

   See step 5 on page 17.

6. **Turn on the fan if desired.**

   See step 6 on page 17.

7. **When you are finished exercising, the console will turn off automatically.**

   See step 7 on page 17.

HOW TO USE THE IFIT TRAINING MODE

The optional iFit Live module allows your console to communicate with your wireless network and unlocks exciting new features. For example, you can download personalized workouts, create your own workouts, track your workout results, and access many other features on the iFit Live website. **To purchase an iFit Live module at any time, go to www.iFit.com or call the telephone number on the front cover of this manual.**

To select the iFit training mode, insert the iFit Live module into the console. Press the Menu button and then press the Increase and Decrease buttons next to the Enter button and highlight IFIT TRAINING. Then, press the Enter button.

For more information about the iFit training mode, go to www.iFit.com. Note: To use the iFit Live module, you must have access to a computer with an internet connection and a USB port. You must also have your own wireless network including an 802.11b router with SSID broadcast enabled (hidden networks are not supported). You will also need an iFit.com membership

HOW TO USE THE SOUND SYSTEM

To play music or audio books through the console sound system while you exercise, plug the included audio cable into the jack on the side of the console and into a jack on your MP3 player or CD player; **make sure that the audio cable is fully plugged in.**

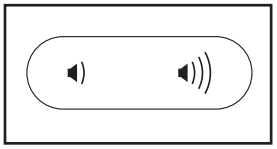

Next, press the play button on your MP3 player or CD player. Adjust the volume level using the volume control on your MP3 player or CD player or press the Volume Increase and Decrease buttons on the console.

HOW TO USE THE INFORMATION MODE

The console features an information mode that allows you to view usage information and to adjust the contrast level of the displays.

To select the information mode, press and hold down the Display button for a few seconds until the information mode appears in the display.

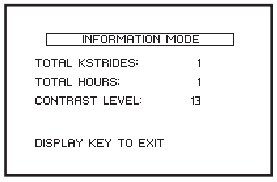

The display will show the total number (in thousands) of strides that have been pedaled on the elliptical. The display will also show the total number of hours that the elliptical has been used.

The currently selected contrast level will also appear in the display. Press the Increase and Decrease buttons next to the Enter button repeatedly to select the desired contrast level.

Press the Display button to save the contrast level setting and exit the information mode.

MAINTENANCE AND TROUBLESHOOTING

Inspect and tighten all parts of the elliptical regularly. Replace any worn parts immediately.

To clean the elliptical, use a damp cloth and a small amount of mild soap. **IMPORTANT: To avoid damage to the console, keep liquids away from the console and keep the console out of direct sunlight.**

CONSOLE TROUBLESHOOTING

If the console does not display your heart rate when you hold the handgrip pulse sensor, or if the displayed heart rate appears to be too high or too low, see step 5 on page 17.

HOW TO CALIBRATE THE RAMP

If the ramp is not functioning properly, the ramp may need to be calibrated. To calibrate the ramp, press and hold the Target Toning Workouts button for several seconds until the calibration mode appears in the display.

Press the Target Toning Workouts button once. The ramp calibration instructions will appear in the display. Press the One Touch Ramp Increase or Decrease button to calibrate the ramp. The ramp will move upward and downward as it calibrates.

When the ramp stops moving, the ramp is calibrated. Then, press the Target Toning Workouts button repeatedly to exit the calibration mode.

HOW TO ADJUST THE DRIVE BELT

If the pedals slip while you are pedaling, even while the resistance is adjusted to the highest level, the drive belt may need to be adjusted.

To adjust the drive belt, first use a flat screwdriver to pry the right Disc (71) carefully away from the right Crank Arm (20). Then, carefully rotate the right Disc out of the way.

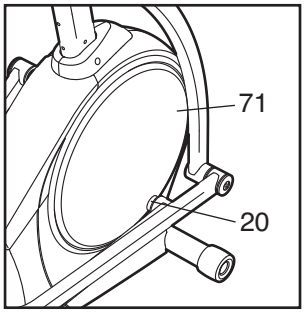

Locate and loosen the Idler Screw (101). Next, tighten the Belt Adjustment Screw (88) until the Drive Belt (113) is tight. Then, retighten the Idler Screw. Note: If necessary, see EXPLODED DRAWING A on pages 25 to 27 and remove the M4 x 16mm Screws (104) and the Bottom Shield (77) from the underside of the elliptical.

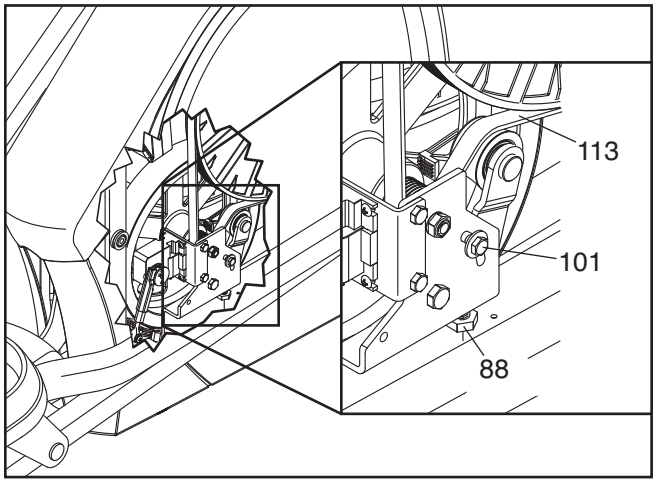

To reattach the right disc, first align the mounts on the disc with the holes in the right crank arm. Then, press the disc firmly into place.

HOW TO ADJUST THE REED SWITCH

If the console does not display correct feedback, the reed switch should be adjusted.

To adjust the reed switch, first use a flat screwdriver to pry the left Disc (71) carefully away from the left Crank Arm (20). Then, carefully rotate the left Disc out of the way.

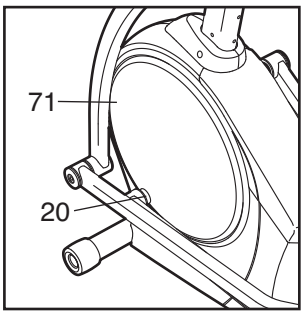

Locate the Reed Switch (38). Rotate the Pulley (19) until a Magnet (43) is aligned with the Reed Switch. Next, loosen but do not remove the indicated M4 x 16mm Screw (104). Slide the Reed Switch slightly closer to or away from the Magnet. Then, retighten the Screw. Turn the Pulley for a moment. Repeat until the console displays correct feedback.

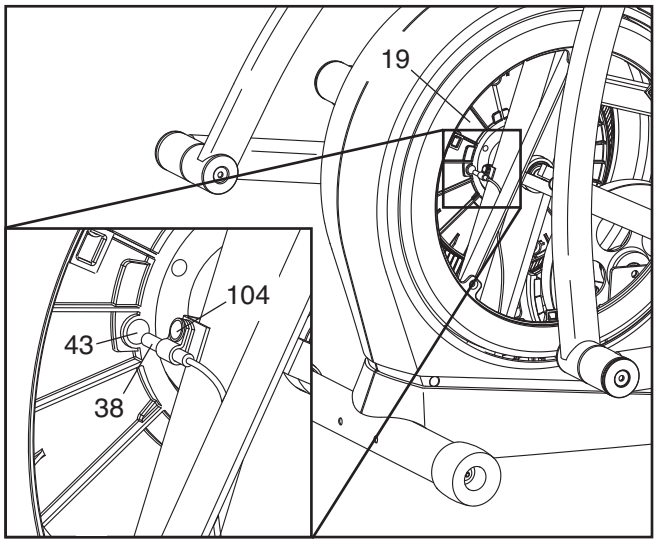

To reattach the left disc, first align the mounts on the disc with the holes in the right crank arm. Then, press the disc firmly into place.

EXERCISE GUIDELINES

⚠ WARNING: Before beginning this or any exercise program, consult your physician. This is especially important for persons over age 35 or persons with pre-existing health problems.

The pulse sensor is not a medical device. Various factors may affect the accuracy of heart rate readings. The pulse sensor is intended only as an exercise aid in determining heart rate trends in general.

These guidelines will help you to plan your exercise program. For detailed exercise information, obtain a reputable book or consult your physician. Remember, proper nutrition and adequate rest are essential for successful results.

EXERCISE INTENSITY

Whether your goal is to burn fat or to strengthen your cardiovascular system, exercising at the proper intensity is the key to achieving results. You can use your heart rate as a guide to find the proper intensity level. The chart below shows recommended heart rates for fat burning and aerobic exercise.

165	*155*	*145*	*140*	*130*	*125*	*115*	♥
145	*138*	*130*	*125*	*118*	*110*	*103*	♥
125	*120*	*115*	*110*	*105*	*95*	*90*	♥
20	*30*	*40*	*50*	*60*	*70*	*80*	

To find the proper intensity level, find your age at the bottom of the chart (ages are rounded off to the nearest ten years). The three numbers listed above your age define your "training zone." The lowest number is the heart rate for fat burning, the middle number is the heart rate for maximum fat burning, and the highest number is the heart rate for aerobic exercise.

Burning Fat—To burn fat effectively, you must exercise at a low intensity level for a sustained period of time. During the first few minutes of exercise, your body uses *carbohydrate calories* for energy. Only after the first few minutes of exercise does your body begin to use stored *fat calories* for energy. If your goal is to burn fat, adjust the intensity of your exercise until your heart rate is near the lowest number in your training zone. For maximum fat burning, exercise with your heart rate near the middle number in your training zone.

Aerobic Exercise—If your goal is to strengthen your cardiovascular system, you must perform aerobic exercise, which is activity that requires large amounts of oxygen for prolonged periods of time. For aerobic exercise, adjust the intensity of your exercise until your heart rate is near the highest number in your training zone.

WORKOUT GUIDELINES

Warming Up—Start with 5 to 10 minutes of stretching and light exercise. A warm-up increases your body temperature, heart rate, and circulation in preparation for exercise.

Training Zone Exercise—Exercise for 20 to 30 minutes with your heart rate in your training zone. (During the first few weeks of your exercise program, do not keep your heart rate in your training zone for longer than 20 minutes.) Breathe regularly and deeply as you exercise–never hold your breath.

Cooling Down—Finish with 5 to 10 minutes of stretching. Stretching increases the flexibility of your muscles and helps to prevent post-exercise problems.

EXERCISE FREQUENCY

To maintain or improve your condition, complete three workouts each week, with at least one day of rest between workouts. After a few months of regular exercise, you may complete up to five workouts each week, if desired. Remember, the key to success is to make exercise a regular and enjoyable part of your everyday life.

PART LIST

Model No. PFEL89910.1 R0211A

Key No.	Qty.	Description
1	1	Front Frame
2	1	Rear Frame
3	1	Ramp
4	1	Upright
5	1	Control Box
6	1	Front Stabilizer
7	1	Console
8	1	Control Box Lid
9	1	Resistance Block
10	1	Ramp Cover
11	1	Lift Bracket
12	1	Lift Roller
13	1	Lift Motor
14	1	Transformer
15	1	Control Board
16	1	Power Switch
17	1	Power Cord Grommet
18	1	Crank
19	1	Pulley
20	2	Crank Arm
21	1	Wiring Grommet
22	1	Idler
23	1	C-magnet
24	1	Motor Bracket
25	1	Resistance Motor
26	1	Resistance Rod Assembly
27	1	Resistance Disc
28	1	Flywheel
29	1	Flywheel Axle
30	8	Lift Bushing
31	1	Lift Axle
32	1	Stabilizer Cover
33	1	Foot
34	2	Wheel
35	1	Pivot Axle
36	4	M10 x 25mm Washer
37	1	Water Bottle Holder
38	1	Reed Switch
39	1	Clamp
40	2	R12 Bearing
41	1	Right Control Grip/Wire
42	2	Large Snap Ring
43	2	Magnet
44	1	Left Pedal Arm
45	2	Roller Arm
46	1	Left Upper Body Leg
47	1	Left Upper Body Arm
48	1	Left Control Grip/Wire
49	2	Pedal
50	2	Pedal Insert
51	2	Roller
52	2	Pedal Arm Cap
53	8	Axle Cover
54	1	Clevis Pin
55	1	Hairpin Cotter Pin
56	1	M10 x 40mm Bolt
57	4	Pedal Arm Bushing
58	1	Right Pedal Arm
59	12	#10 x 13mm Screw
60	1	Right Upper Body Leg
61	1	Right Upper Body Arm
62	1	Rear Stabilizer
63	1	Right Pulse Sensor/Wire
64	1	M5 x 7mm Screw
65	1	Ramp Axle
66	4	M10 x 20mm Patch Screw
67	2	Outer Cover
68	2	Inner Cover
69	1	Left Pulse Sensor/Wire
70	2	Inner Pivot Bushing
71	2	Disc
72	8	Ramp Bushing
73	1	Left Shield
74	1	Right Shield
75	1	Shield Cover
76	4	V-clip
77	1	Bottom Shield
78	2	Key
79	1	M6 Locknut
80	1	Rear Upright Cover
81	2	M10 Shoulder Screw
82	21	M8 x 19mm Patch Screw
83	11	M8 Split Washer
84	2	M8 x 80mm Patch Screw
85	2	M6 x 12mm Hex Patch Screw
86	2	M8 x 48mm Hex Bolt
87	4	M8 x 13mm Screw
88	1	Belt Adjustment Screw
89	1	Pivot Screw
90	1	M6 x 65mm Bolt
91	1	Front Upright Cover
92	2	Leveling Foot
93	4	M4 x 12mm Screw
94	2	M8 x 56mm Patch Screw
95	2	Wave Washer
96	4	M8 x 38mm Bolt
97	1	M10 x 51mm Bolt
98	8	M8 x 25mm Washer
99	2	M10 Locknut
100	1	M5 Washer

Key No.	Qty.	Description
101	1	Idler Screw
102	8	M8 Locknut
103	1	M3.5 x 12mm Flat Head Screw
104	35	M4 x 16mm Screw
105	12	M4 x 12mm Flange Screw
106	2	M4 x 16mm Bright Screw
107	4	Roller Arm Bushing
108	2	M6 x 13mm Screw
109	3	M6 Washer
110	1	Upper Wire Harness
111	12	M6 Split Washer
112	1	Power Cord
113	1	Drive Belt
114	1	Audio Cable
115	4	#6 x 9.5mm Screw
116	2	Upper Bushing
117	18	Mount
118	2	Motor Bracket Screw
119	2	Small Snap Ring
120	1	Lower Wire Harness
121	1	Small Snap Ring
122	2	Adjustment Nut
*	–	Assembly Tool
*	–	Grease Packet
*	–	User's Manual

Note: Specifications are subject to change without notice. For information about ordering replacement parts, see the back cover of this manual. *These parts are not illustrated.

EXPLODED DRAWING A

Model No. PFEL89910.1 R0211A

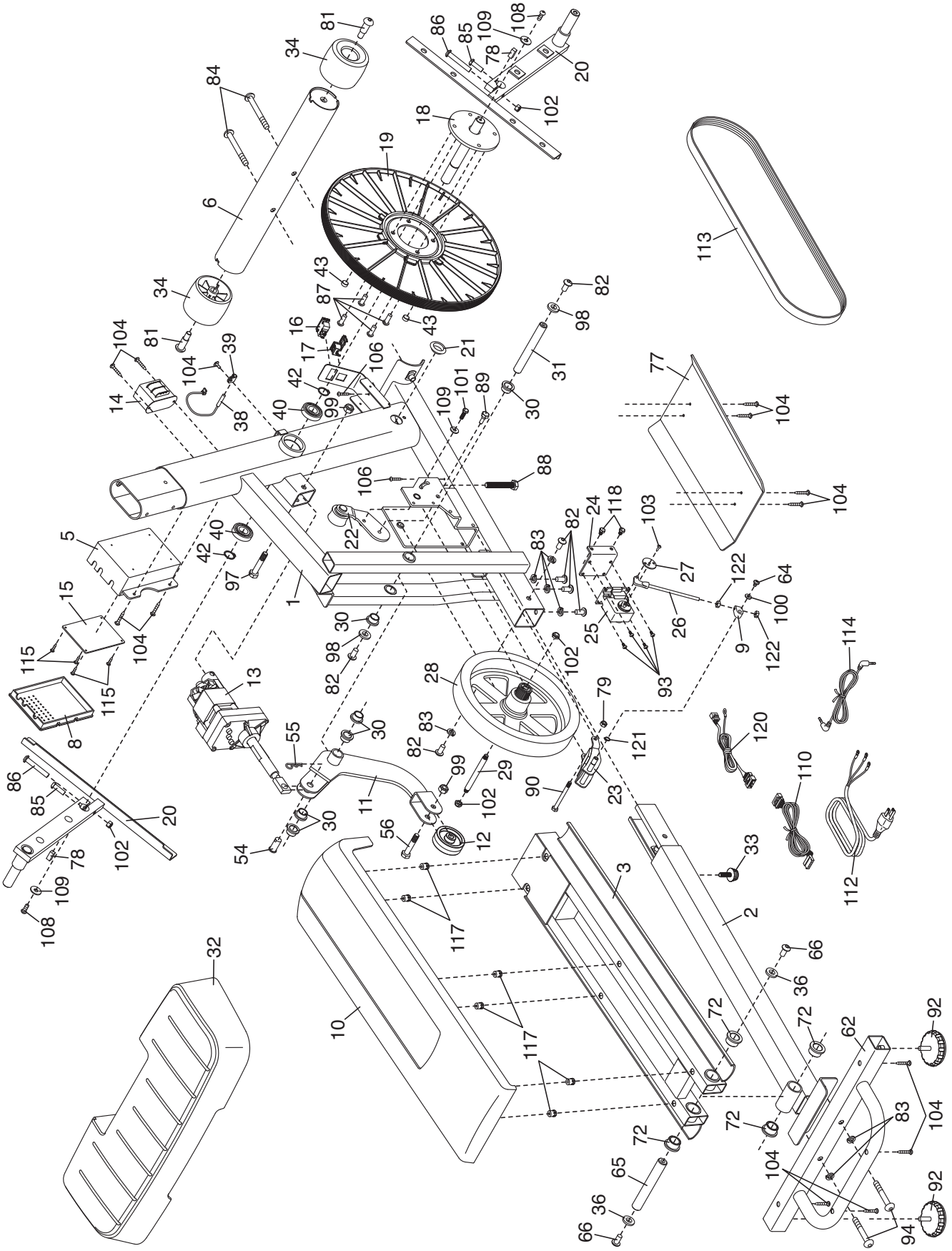

EXPLODED DRAWING B

Model No. PFEL89910.1 R0211A

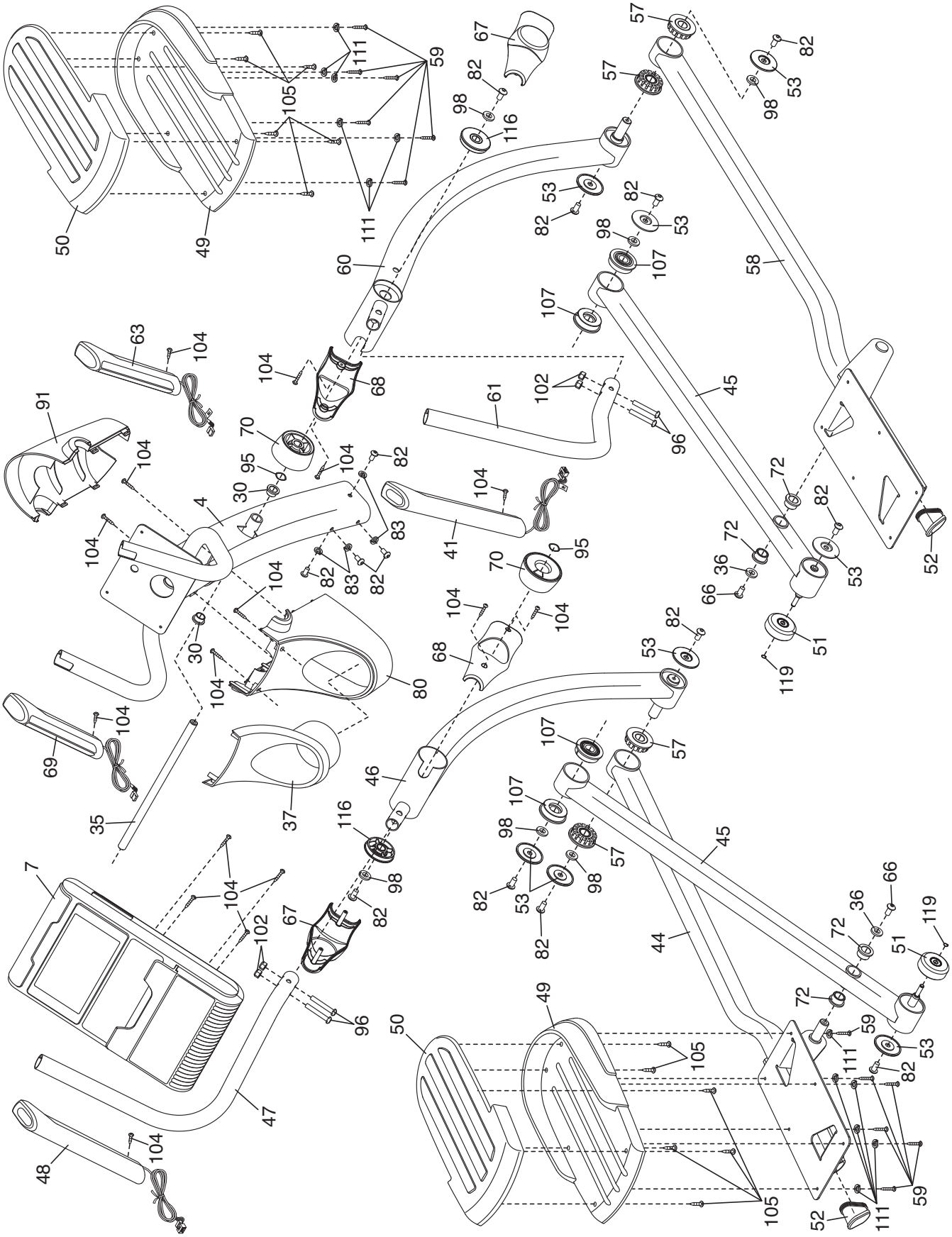

EXPLODED DRAWING C

Model No. PFEL89910.1 R0211A

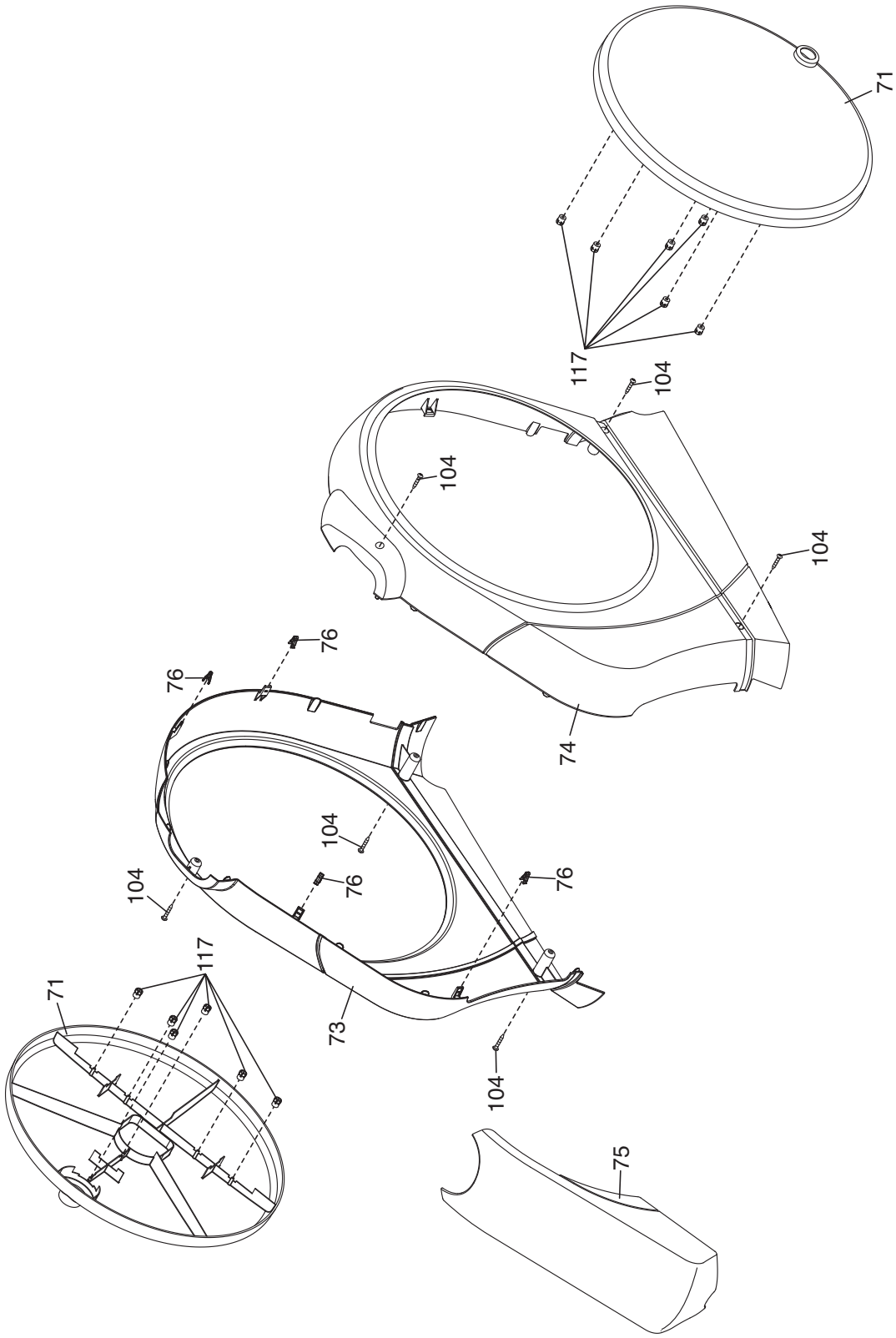

ORDERING REPLACEMENT PARTS

To order replacement parts, please see the front cover of this manual. To help us assist you, be prepared to provide the following information when contacting us:

- the model number and serial number of the product (see the front cover of this manual)
- the name of the product (see the front cover of this manual)
- the key number and description of the replacement part(s) (see the PART LIST and the EXPLODED DRAWING near the end of this manual)

LIMITED WARRANTY

IMPORTANT: You must register this product within 30 days of the purchase date to avoid added fees for service needed under warranty. Go to www.proformservice.com/registration.

ICON Health & Fitness, Inc. (ICON) warrants this product to be free from defects in workmanship and material, under normal use and service conditions. The frame is warranted for a lifetime. Parts and labor are warranted for one (1) year from the date of purchase.

This warranty extends only to the original purchaser. ICON's obligation under this warranty is limited to repairing or replacing, at ICON's option, the product through one of its authorized service centers. All repairs for which warranty claims are made must be preauthorized by ICON. If the product is shipped to a service center, freight charges to and from the service center will be the customer's responsibility. For replacement parts shipped while the product is under warranty, the customer will be responsible for a minimal handling charge. For in-home service, the customer will be responsible for a minimal trip charge. This warranty does not extend to any damage to a product caused by or attributable to freight damage, abuse, misuse, improper or abnormal usage, or repairs not provided by an ICON authorized service center; to products used for commercial or rental purposes or as store display models; or to products transported or purchased outside the US. No other warranty beyond that specifically set forth above is authorized by ICON.

ICON is not responsible or liable for indirect, special, or consequential damages arising out of or in connection with the use or performance of the product; damages with respect to any economic loss, loss of property, loss of revenues or profits, loss of enjoyment or use, or costs of removal or installation; or other consequential damages of whatsoever nature. Some states do not allow the exclusion or limitation of incidental or consequential damages. Accordingly, the above limitation may not apply to you.

The warranty extended hereunder is in lieu of any and all other warranties, and any implied warranties of merchantability or fitness for a particular purpose are limited in their scope and duration to the terms set forth herein. Some states do not allow limitations on how long an implied warranty lasts. Accordingly, the above limitation may not apply to you.

This warranty gives you specific legal rights. You may also have other rights that vary from state to state.

ICON Health & Fitness, Inc., 1500 S. 1000 W., Logan, UT 84321-9813

Part No. 307584 R0211A

Printed in China © 2011 ICON IP, Inc.