725 PRO-FORM®

PERFORMANCE TREADMILLS

Model No. PFTL72570
Serial No. _____

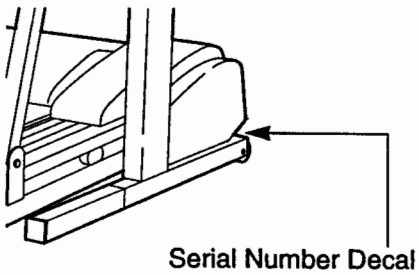

QUESTIONS?

As a manufacturer, we are committed to providing complete customer satisfaction. If you have questions, or if there are missing or damaged parts, we will guarantee complete satisfaction through direct assistance from our factory.

TO AVOID UNNECESSARY DELAYS, PLEASE CALL DIRECT TO OUR TOLL-FREE CUSTOMER HOT LINE. The trained technicians on our Customer Hot Line will provide immediate assistance, free of charge to you.

CUSTOMER HOT LINE:
1-800-999-3756
Mon.–Fri., 6 a.m.–6 p.m. MST

⚠ CAUTION

Read all precautions and instructions in this manual before using this equipment. Save this manual for future reference.

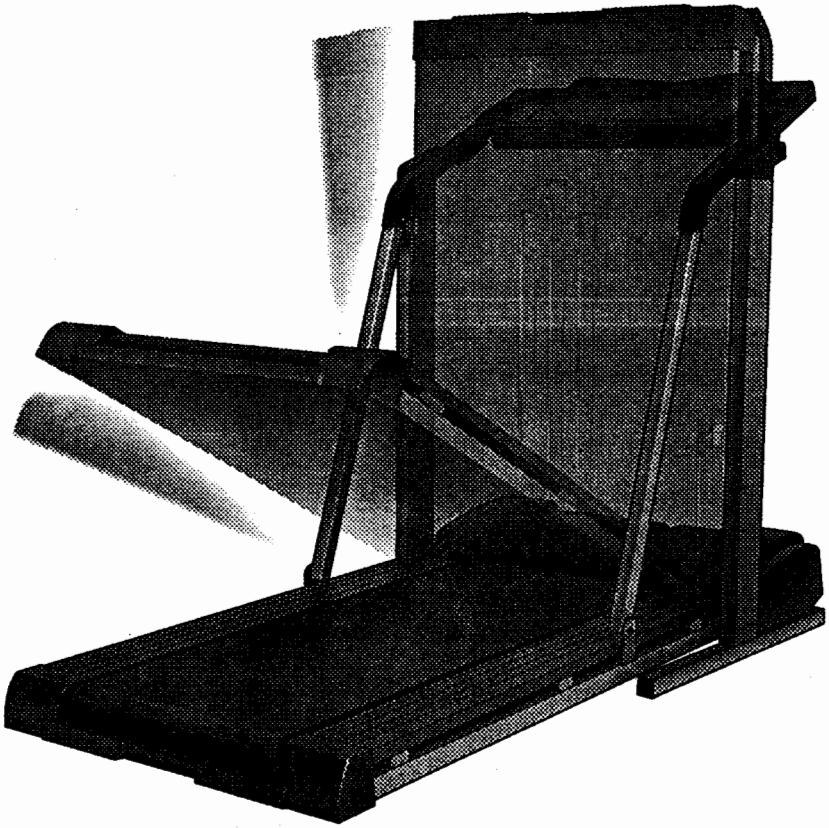

USER'S MANUAL

TABLE OF CONTENTS

IMPORTANT PRECAUTIONS 2
BEFORE YOU BEGIN 4
ASSEMBLY 5
HOW TO USE THE CHEST PULSE SENSOR 7
OPERATION AND ADJUSTMENT 9
HOW TO FOLD AND MOVE THE TREADMILL 20
MAINTENANCE AND TROUBLE-SHOOTING 22
CONDITIONING GUIDELINES 24
PART LIST 26
ORDERING REPLACEMENT PARTS . . . . . Back Cover
LIMITED WARRANTY . . . . . Back Cover

Note: An EXPLODED DRAWING is attached in the center of this manual. Save the drawing for future use.

IMPORTANT PRECAUTIONS

⚠ WARNING: To reduce the risk of burns, fire, electric shock, or injury to persons, read the following important precautions and information before operating the treadmill.

1. It is the responsibility of the owner to ensure that all users of this treadmill are adequately informed of all warnings and precautions.
2. Use the treadmill only as described in this manual.
3. Place the treadmill on a level surface, with eight feet of clearance behind it. Do not place the treadmill on any surface that blocks air openings. To protect the floor or carpet from damage, place a mat under the treadmill.
4. Keep the treadmill indoors, away from moisture and dust. Do not put the treadmill in a garage or covered patio, or near water.
5. Do not operate the treadmill where aerosol products are used or where oxygen is being administered.
6. Keep children under the age of 12 and pets away from the treadmill at all times.
7. The treadmill should not be used by persons weighing more than 250 pounds.
8. Never allow more than one person on the treadmill at a time.
9. Wear appropriate exercise clothing when using the treadmill. Do not wear loose clothing that could become caught in the treadmill. Athletic support clothes are recommended for both men and women. *Always wear athletic shoes. Never use the treadmill with bare feet, wearing only stockings, or in sandals.*
10. When connecting the power cord (see HOW TO PLUG IN THE POWER CORD on page 9), plug the power cord into a surge protector (not included) and plug the surge protector into a grounded circuit capable of carrying 15 or more amps. No other appliance should be on the same circuit.
11. Use only a UL-listed surge protector, rated at 15 amps, with a 14-gauge cord of five feet or less in length. Do not use an extension cord.
12. Keep the power cord and the surge protector away from heated surfaces.
13. Never move the walking belt while the power is turned off. Do not operate the treadmill if the power cord or plug is damaged, or if the treadmill is not working properly. (See BEFORE YOU BEGIN on page 4 if the treadmill is not working properly.)
14. Never start the treadmill while you are standing on the walking belt. Always hold the handrails while using the treadmill.

15. The treadmill is capable of high speeds. Adjust the speed in small increments to avoid sudden jumps in speed.

16. To reduce the possibility of the treadmill overheating, do not operate the treadmill continuously for longer than 1 hour.

17. The pulse sensor is not a medical device. Various factors, including the user's movement, may affect the accuracy of heart rate readings. The pulse sensor is intended only as an exercise aid in determining heart rate trends in general.

18. Never leave the treadmill unattended while it is running. Always remove the key and move the on/off switch to the off position when the treadmill is not in use. (See the drawing on page 4 for the location of the on/off switch.)

19. Do not attempt to raise, lower, or move the treadmill until it is properly assembled. (See ASSEMBLY on page 5, and HOW TO MOVE THE TREADMILL on page 20.) You must be able to safely lift 45 pounds (20 kg) in order to raise, lower, or move the treadmill.

20. When folding or moving the treadmill, make sure that the storage latch is fully closed.

21. Inspect and tighten all parts of the treadmill every three months.

22. Never insert any object into any opening.

23. Always unplug the power cord before performing the maintenance and adjustment procedures described in this manual. Never remove the motor hood unless instructed to do so by an authorized service representative. Servicing other than the procedures in this manual should be performed by an authorized service representative only.

24. This treadmill is intended for in-home use only. Do not use this treadmill in any commercial, rental, or institutional setting.

⚠ WARNING: Before beginning this or any exercise program, consult your physician. This is especially important for persons over the age of 35 or persons with pre-existing health problems. Read all instructions before using. ICON assumes no responsibility for personal injury or property damage sustained by or through the use of this product.

SAVE THESE INSTRUCTIONS

The decals shown have been placed on your treadmill. If a decal is missing, or if it is not legible, please call our Customer Service Department, toll-free, to order a free replacement decal (see ORDERING REPLACEMENT PARTS on the back cover of this manual). Apply the decal in the location shown.

IMPORTANT: Incline must be set at lowest level before folding treadmill into storage position.

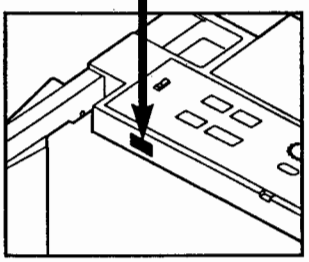

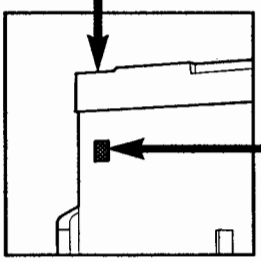

⚠ WARNING!

- Never allow children to play on or around treadmill.
- Storage latch must be fully engaged before treadmill is moved or stored.

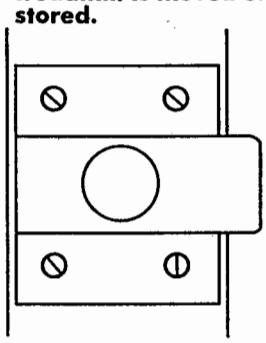

CAUTION

Keep hands and feet away from this area while the treadmill is in operation.

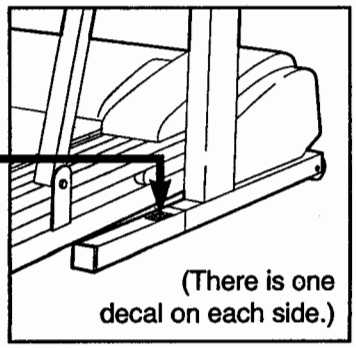

(There is one decal on each side.)

BEFORE YOU BEGIN

Thank you for selecting the innovative PROFORM® 725 treadmill. The 725 treadmill blends advanced technology with innovative design to let you enjoy an excellent form of cardiovascular exercise in the convenience and privacy of your home.

For your benefit, read this manual carefully before using the treadmill. If you have additional questions, please call our Customer Service Department toll-free at 1-800-999-3756, Monday through Friday, 6 a.m. until 6 p.m. Mountain Time (excluding holidays). To help us assist you, please note the product model number and serial number before calling. The model number of the treadmill is PFTL72570. The serial number can be found on a decal attached to the treadmill (see the front cover of this manual for the location).

Before reading further, please review the drawing below and familiarize yourself with the parts that are labeled.

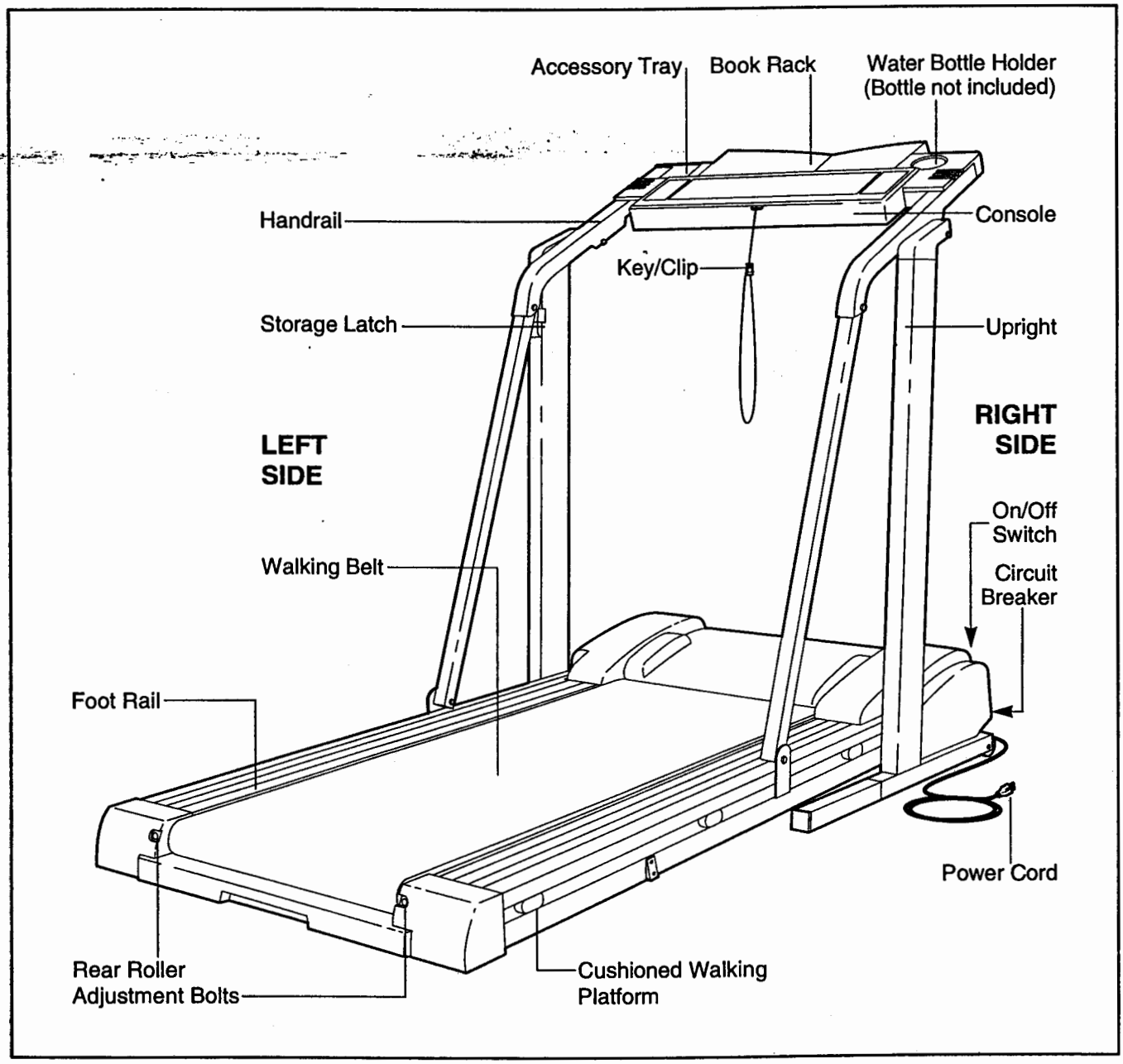

ASSEMBLY

Assembly requires two people. Set the treadmill in a cleared area and remove the packing materials. Do not dispose of the packing materials until assembly is completed.

Assembly requires the included allen wrench , and your own adjustable wrench , phillips screwdriver , and scissors .

1. **Refer to the drawing on page 4 and identify the left side of the treadmill.** With the help of a second person, carefully lay the treadmill on its left side.

   Firmly slide an Extension Leg (99) into each side of the Base (70) as shown. Make sure that the Extension Legs are turned so the Base Pads (89) are on the indicated sides. Using the included Allen Wrench (92), attach each Extension Leg with an Extension Screw (93).

   With the help of a second person, carefully raise the treadmill to the vertical position so both Extension Legs (99) are resting flat on the floor.

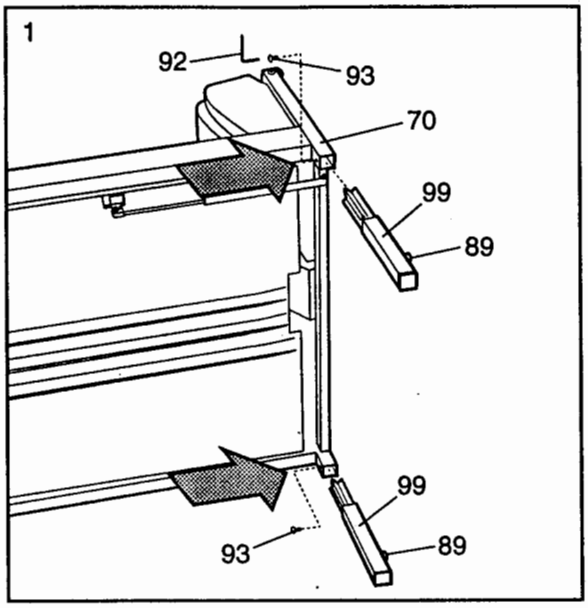

2. Remove the four Latch Screws (123) from the left Upright (70).

   Without removing the tape from the Latch Bracket (60) and Latch Spacer (66), hold the Latch Spacer against the left Upright (70) as shown. Attach the Latch Bracket and Latch Spacer with the four Latch Screws (123). **Make sure that the Screws are tight, but do not overtighten them; if the Screws are overtightened, the Storage Latch (69) will not slide smoothly.** Remove any tape that is still visible.

   Note: The inset drawing shows how the Latch Bracket (60), Latch Springs (68), Storage Latch (69), and Latch Spacer (66) fit together.

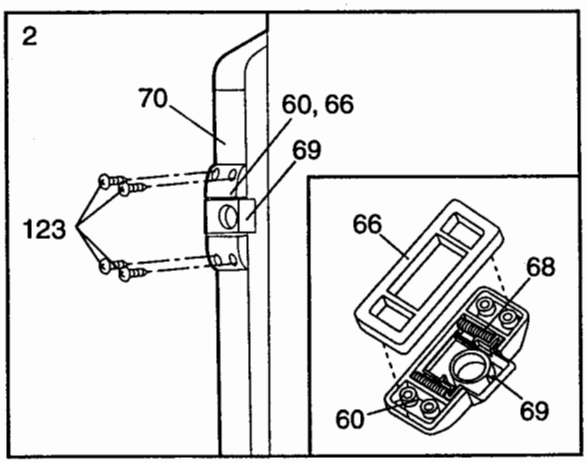

3. Remove the indicated Screw (4) from the treadmill Frame (1). Attach the plastic Catch (5) to the Frame with the Screw. Note: It may be necessary to slide the Storage Latch (69) to the left while attaching the Catch.

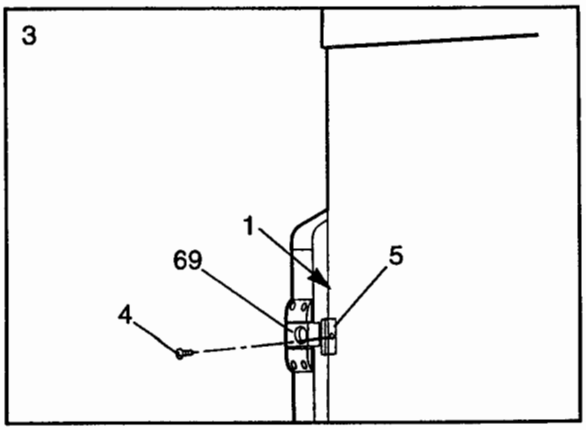

4. See HOW TO LOWER THE TREADMILL FOR USE on page 21. Follow the instructions on page 21 to lower the treadmill.

   Cut the two shipping ties from the Right and Left Handrails (72, 73).

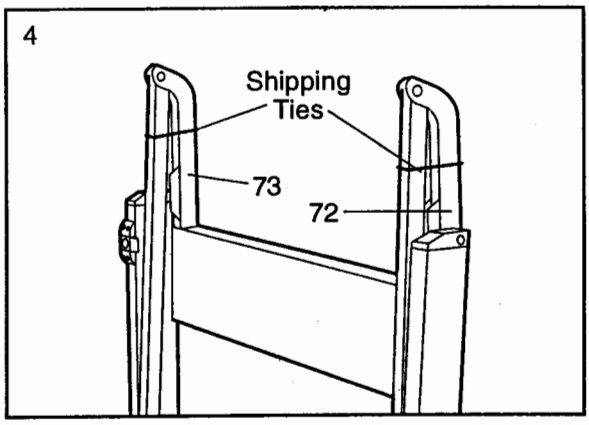

5. Align the hole in the lower end of the right Handrail Arm (10) with the hole in the frame tab as shown. Attach the Handrail Arm with a Handrail Bolt (57) and a Handrail Nut (8).

   Repeat this step on the left side.

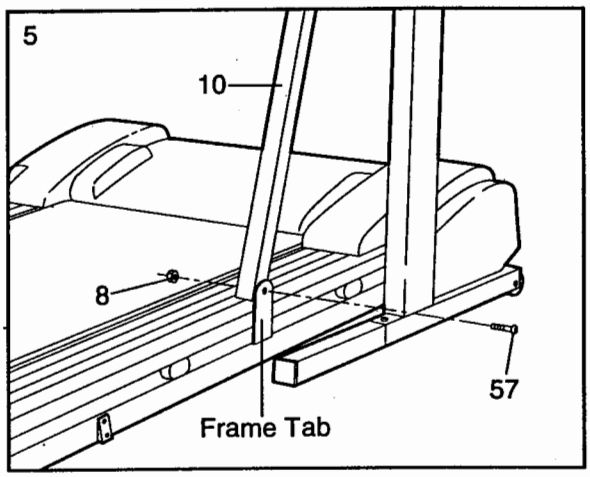

6. Remove the backing from the Adhesive Clip (91). Press the Adhesive Clip onto the base of the Uprights (70) in the indicated location. Press the Allen Wrench (92) into the Adhesive Clip.

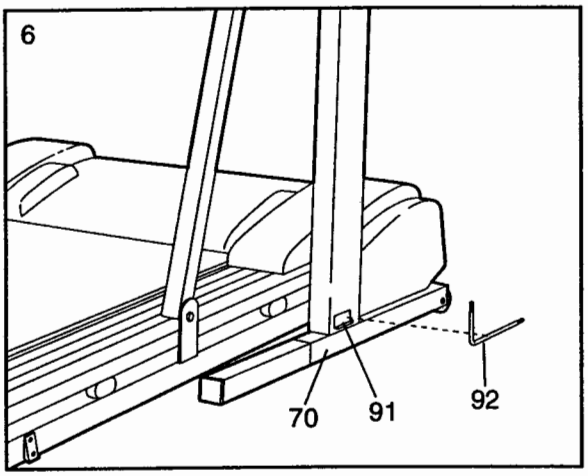

7. **Make sure that all parts are tightened before you use the treadmill.** To protect the floor or carpet, place a mat under the treadmill. To order a mat, see the back cover of this manual.

HOW TO USE THE CHEST PULSE SENSOR

The state-of-the-art chest pulse sensor allows you to continuously monitor your heart rate while you exercise. Follow the instructions below to use the chest pulse sensor.

HOW TO PUT ON THE CHEST PULSE SENSOR

The chest pulse sensor consists of two components: the chest strap and the sensor unit.

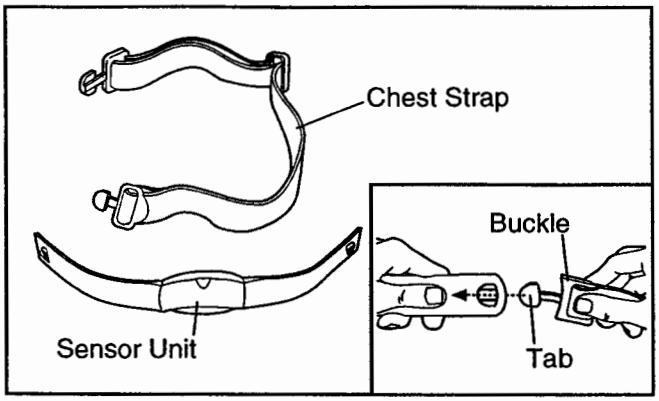

Refer to the inset drawing above. Insert one of the tabs on the chest strap through one end of the sensor unit. Press the end of the sensor unit under the buckle on the chest strap. The tab should be flush with the front of the sensor unit.

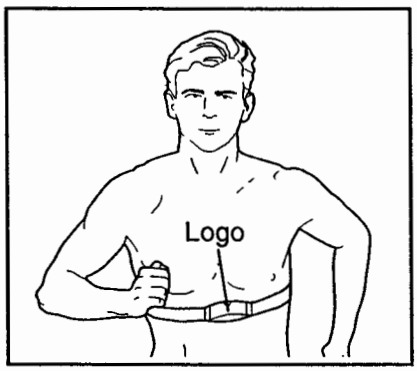

Wrap the chest strap around your chest and attach the free end of the chest strap to the sensor unit. Adjust the length of the chest strap, if necessary. The chest pulse sensor should be under your clothing, tight against your skin, and as high under the pectoral muscles or breasts as is comfortable. Make sure that the logo on the sensor unit is facing forward and is right-side-up.

Next, pull the sensor unit away from your body a few inches and locate the two electrode areas on the inner side. The electrode areas are the areas covered by shallow ridges. Using saline solution such as saliva or contact lens solution, wet both electrode areas. Return the sensor unit to a position against your chest.

CARE AND MAINTENANCE

- Thoroughly dry the chest pulse sensor after each use. The chest pulse sensor is activated when the electrode areas are wetted and the chest pulse sensor is put on; the chest pulse sensor shuts off when it is removed and the electrode areas are dried. If the chest pulse sensor is not dried after each use, it may remain activated longer than necessary, draining the battery prematurely.
- Store the chest pulse sensor in a warm, dry place. Do not store the chest pulse sensor in a plastic bag or other container that may trap moisture.
- Do not expose the chest pulse sensor to direct sunlight for extended periods of time; do not expose it to temperatures above 122° Fahrenheit (50° Celsius) or below 14° Fahrenheit (-10° Celsius).
- Do not excessively bend or stretch the sensor unit when using or storing the chest pulse sensor.
- Clean the sensor unit using a damp cloth—never use alcohol, abrasives, or chemicals. The chest strap may be hand washed and air dried.

CHEST PULSE SENSOR TROUBLE-SHOOTING

The instructions beginning on page 10 explain how the chest pulse sensor is used with the console. If the letters "PLS" appear in the CALS./FAT CALS./ PULSE display or if the displayed heart rate is excessively high or low, try the steps below.

- Make sure that the chest pulse sensor is under your clothing, tight against your skin, and as high under the pectoral muscles or breasts as is comfortable. The logo on the sensor unit must be facing forward and be right-side-up. Note: If the chest pulse sensor does not function when positioned as described, try moving it slightly lower or higher on your chest.
- Use saline solution such as saliva or contact lens solution to wet the two electrode areas on the sensor unit. If heart rate readings do not appear until you begin perspiring, re-wet the electrode areas.

- As you walk or run on the treadmill, position yourself near the center of the walking belt. **For the console to display heart rate readings, the user must be within arm's length of the console.**

- The chest pulse sensor is designed to work with people who have normal heart rhythms. Heart rate reading problems may be caused by medical conditions such as premature ventricular contractions (pvcs), tachycardia bursts, and arrhythmia.

- The operation of the chest pulse sensor can be affected by magnetic interference caused by high power lines or other sources. If it is suspected that magnetic interference may be causing a problem, try relocating the treadmill.

- **The CR 2032 battery may need to be replaced.**

Locate the battery cover on the back of the sensor unit. Insert a coin into the slot in the cover, turn the cover counterclockwise, and remove it. Remove the old battery and insert a new CR 2032 battery, making sure that the battery is turned so the writing is on top. Make sure that the rubber gasket is in place in the sensor unit. Replace the battery cover and turn it clockwise to close it.

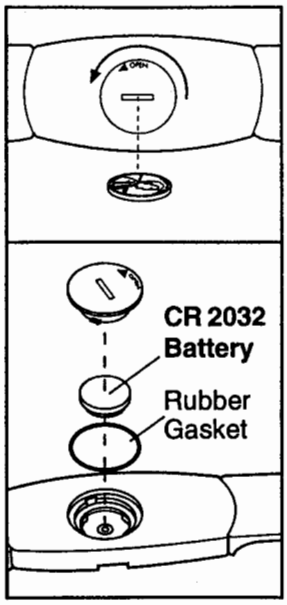

OPERATION AND ADJUSTMENT

THE PERFORMANT LUBE™ WALKING BELT

Your treadmill features a walking belt coated with PERFORMANT LUBE™, a high-performance lubricant. **Important: Never apply silicone spray or other substances to the walking belt or the walking platform. They will deteriorate the walking belt and cause excessive wear.**

HOW TO PLUG IN THE POWER CORD

⚠ DANGER: Improper connection of the equipment-grounding conductor can result in an increased risk of electric shock. Check with a qualified electrician or serviceman if you are in doubt as to whether the product is properly grounded. Do not modify the plug provided with the product—if it will not fit the outlet, have a proper outlet installed by a qualified electrician.

Your treadmill, like any other type of sophisticated electronic equipment, can be seriously damaged by sudden voltage changes in your home's power. Voltage surges, spikes, and noise interference can result from weather conditions or from other appliances being turned on or off. **To decrease the possibility of your treadmill being damaged, always use a surge protector (not included) with your treadmill.**

Surge protectors are sold at most hardware stores and department stores. Use only a UL-listed surge protector, rated at 15 amps, with a 14-gauge cord of five feet or less in length.

This product must be grounded. If it should malfunction or break down, grounding provides a path of least resistance for electric current to reduce the risk of electric shock. This product is equipped with a cord having an equipment-grounding conductor and a grounding plug. **Plug the power cord into a surge protector, and plug the surge protector into an appropriate outlet that is properly installed and grounded in accordance with all local codes and ordinances.**

This product is for use on a nominal 120-volt circuit, and has a grounding plug that looks like the plug illustrated in drawing 1 below. A temporary adapter that looks like the adapter illustrated in drawing 2 may be used to connect the surge protector to a 2-pole receptacle as shown in drawing 2 if a properly grounded outlet is not available.

The temporary adapter should be used only until a properly grounded outlet (drawing 1) can be installed by a qualified electrician.

The green-colored rigid ear, lug, or the like extending from the adapter must be connected to a permanent ground such as a properly grounded outlet box cover. Whenever the adapter is used it must be held in place by a metal screw. **Some 2-pole receptacle outlet box covers are not grounded. Contact a qualified electrician to determine if the outlet box cover is grounded before using an adapter.**

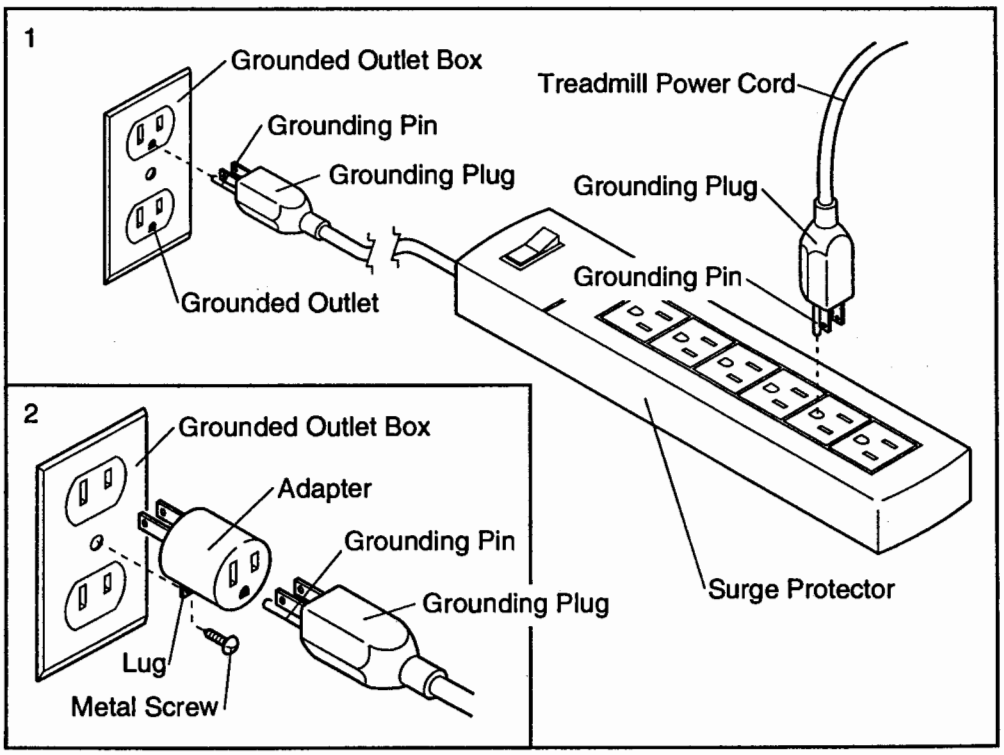

DIAGRAM OF THE CONSOLE

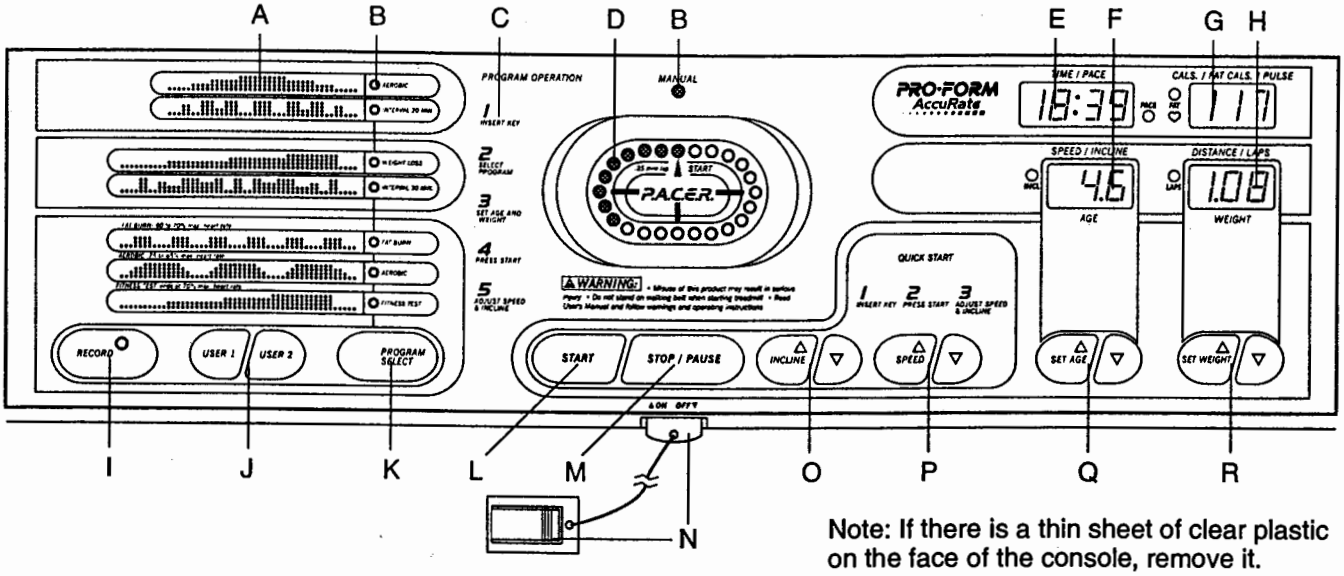

Note: If there is a thin sheet of clear plastic on the face of the console, remove it.

⚠ CAUTION: Before operating the console, read the following precautions.

- Do not stand on the walking belt when turning on the power or starting the walking belt.
- Always wear the clip (see part "N" in the drawing above) while operating the treadmill. If the key is pulled from the console, the walking belt will stop.
- The treadmill is capable of high speeds. Adjust the speed in small increments.
- The chest pulse sensor is not a medical device. Various factors, including the user's movement, may affect the accuracy of heart rate readings. The pulse sensor is intended only as an exercise aid in determining heart rate trends in general.
- If you have heart problems, or if you are over 60 years of age and have been inactive, *do not use the FAT BURN or AEROBIC program.* If you are taking medication regularly, consult your physician to find whether the medication will affect your exercise heart rate.
- To reduce the risk of electric shock, keep the console dry. Avoid spilling liquids on the console and use only a sealable water bottle.

FEATURES OF THE CONSOLE

The treadmill console offers an impressive array of features to make your workouts more effective.

When the console is in the manual mode, the speed and incline of the treadmill can be changed with a touch of a button. As you exercise, you can watch your progress on the LED track while the four displays provide continuous exercise feedback.

The console also features seven preset workout programs: four speed programs automatically control the speed of the treadmill as they guide you through effective workouts; two heart rate programs automatically control the speed and incline of the treadmill to keep your heart rate near predetermined settings; and a unique fitness test program measures the relative fitness level you have achieved.

In addition, the console offers two custom workout programs. Each custom program automatically controls the speed and incline of the treadmill according to settings that you program.

To use the manual mode, follow the steps beginning on page 12. **To use a speed program,** see page 14. **To use a heart rate program,** see page 15. **To use the fitness test program,** see page 16. **To create a custom program,** see page 18. **To use a custom program,** see page 19.

Note: The console can display speed and distance in either miles or kilometers (see SPEED/INCLINE DISPLAY on page 13). For simplicity, all instructions in this manual refer to miles.

DIAGRAM OF THE CONSOLE

Refer to the drawing on the opposite page.

A. Workout graphs—These graphs show the settings of the seven preset programs. During the AEROBIC program, for example, the graph shows that the speed of the treadmill will gradually increase during the first half of the program, and then gradually decrease during the last half of the program.

B. Mode indicators—These indicators show when the manual mode is selected and when one of the seven preset programs is selected.

C. Step-by-step instructions—These instructions provide a quick overview of console operation.

D. LED track—This display shows your progress around a 1/4-mile "track" as you exercise.

E. TIME/PACE display—When the manual mode is selected, this display shows both the elapsed time and your current pace (in minutes per mile). When a preset program or a custom program is selected, the display will show the time remaining in the program and your current pace.

F. SPEED/INCLINE display—This display shows the speed of the walking belt and the incline level of the treadmill. This display is also used to enter your age into the console.

G. CALORIES/FAT CALORIES/PULSE display—This display shows three numbers: the approximate number of calories you have burned, the number of fat calories you have burned, and your heart rate.

H. DISTANCE/LAPS display—This display shows the distance that you have walked and the number of 1/4-mile laps you have completed. This display is also used to enter your weight into the console.

I. RECORD button—This button is used to create and modify custom programs.

J. USER 1 and 2 buttons—These buttons are used to select the two custom programs.

K. PROGRAM SELECT button—This button is used to select the manual mode and the seven preset programs.

L. START button—This button is used to start the walking belt.

M. STOP/PAUSE button—This button is used to stop the walking belt.

N. Key with clip—The key turns the console on and off. The clip is worn on the waistband of your clothes.

O. INCLINE buttons—These buttons are used to change the incline of the treadmill. The incline range is 1.5% to 10%.

P. SPEED buttons—These buttons are used to change the speed of the walking belt. The speed range is 0.5 mph to 10 mph. Note: When the START button is pressed, the walking belt will begin to move at 1.0 mph.

Q. SET AGE buttons—These buttons are used to enter your age into the console. You must enter your age to use the FAT BURN, AEROBIC, or FITNESS TEST program.

R. SET WEIGHT buttons—These buttons are used to enter your weight into the console.

Note: Each time one of the buttons is pressed, a tone will sound. If a button is pressed at the wrong time (for example, if a SPEED button is pressed while the walking belt is stationary), a different tone will sound.

HOW TO TURN ON THE POWER

1 Locate the on/off switch on the front of the treadmill. Make sure that the on/off switch is in the on position.

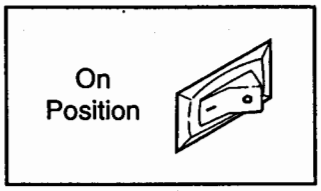

2 Plug in the power cord (see page 9). All displays and indicators on the console will flash once. Note: If the key is in the console when the power cord is plugged in, the letters "PO" will flash in the SPEED/INCLINE display. If this occurs, remove the key.

3 Stand on the foot rails of the treadmill. Find the clip attached to the key and slide the clip onto the waistband of your clothing.

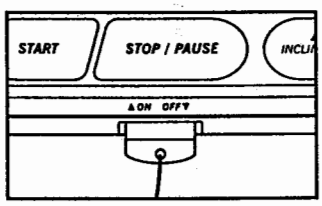

Next, insert the key into the console. After a moment, the MANUAL indicator, one indicator in the LED track, and the TIME/PACE display will light. In addition, the word "AGE" will appear in the SPEED/INCLINE display and the letters "LbS" will appear in the DISTANCE/LAPS display.

HOW TO USE THE MANUAL MODE

1 Insert the key fully into the console.

See HOW TO TURN ON THE POWER on page 11. Note: When you are familiar with the console, you may go directly to step 5 if desired. The first time you use the console, please read and follow all steps.

2 Select the MANUAL mode.

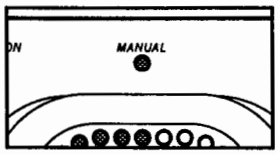

When the key is inserted, the manual mode will automatically be selected, as shown by the MANUAL indicator. If a preset program or a custom program is selected, press the PROGRAM SELECT button repeatedly until the MANUAL indicator is lit.

3 Put on the chest pulse sensor, if desired.

If you want to wear the chest pulse sensor, see HOW TO USE THE CHEST PULSE SENSOR on page 7.

4 Enter your weight, if desired.

If your weight is entered into the console, the console will more accurately measure the calories and fat calories you burn. To enter your weight, press one of the SET WEIGHT buttons. The current weight setting will appear in the DISTANCE/LAPS display. Press the SET WEIGHT buttons again to enter your weight. Each time one of the buttons is pressed, the weight setting will change by 1 pound. If one of the buttons is held down, the weight setting will change in increments of 5 pounds. Once your weight is entered, it will be saved in the console's memory.

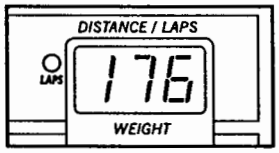

Note: Although the letters "AGE" appear in the SPEED/INCLINE display, it is not necessary to enter your age to use the manual mode. If you want to enter your age at this time, see step 5 on page 15.

5 Press the START button to start the walking belt.

A moment after the button is pressed, the walking belt will begin to move at 1.0 mph. Hold the handrails and begin walking.

To stop the walking belt for a moment, press the STOP/PAUSE button. All displays will pause and the TIME/PACE display will begin to flash. To restart the walking belt, press the START button. To stop the walking belt and reset all displays, hold down the STOP/PAUSE button for two seconds.

6 Adjust the speed of the walking belt.

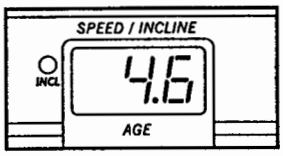

While the walking belt is moving, adjust the speed of the walking belt by pressing the SPEED buttons. Each time one of the buttons is pressed, the speed will change by 0.1 mph. If one of the buttons is held down, the speed will change in increments of 0.5 mph. The speed range is 0.5 mph to 10 mph. Note: When the SPEED buttons are pressed, the SPEED/INCLINE display will show the selected speed setting for five seconds. The display will then show the actual speed of the walking belt.

7 Adjust the incline of the treadmill.

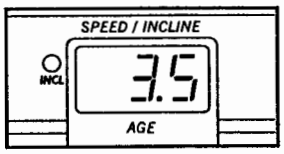

The incline of the treadmill can be adjusted with the INCLINE buttons. Each time one of the buttons is pressed, the incline will change by 0.5%. The buttons can be held down to change the incline quickly. The incline range is 1.5% to 10%. Note: After the INCLINE buttons are pressed, it may take a few seconds for the treadmill to reach the selected incline setting.

8 Follow your progress with the LED track and the four displays.

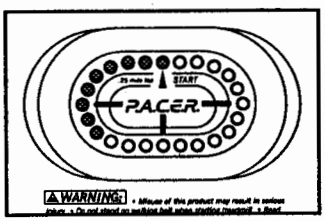

LED track—The LED track represents a distance of 1/4 mile. As you exercise, the indicators around the track will light one at a time. When you have walked 1/4 mile, a new lap will begin.

TIME/PACE display— This display shows the elapsed time and your current pace (pace is measured in *minutes per mile*). The display will change from one number to the other every seven seconds. The PACE indicator will light when your current pace is shown. Note: When a preset program or a custom program is selected, the display will show the time remaining in the program and your current pace.

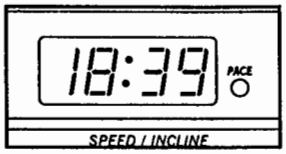

SPEED/INCLINE display—This display shows the speed of the walking belt and the incline level of the treadmill. The display will change from one number to the other every seven seconds. The INCL. indicator will light when the incline level is shown.

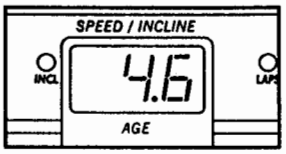

Note: The console can measure speed in either miles per hour or kilometers per hour. To check the unit of measurement, first hold down the STOP/PAUSE button while inserting the key into the console. Continue holding the STOP/PAUSE button for a moment. An "E" (for english miles) or an "M" (for metric kilometers) will appear in the CALS./FAT CALS./PULSE display. To change the unit of measurement, press the SPEED △ button. Remove and then reinsert the key.

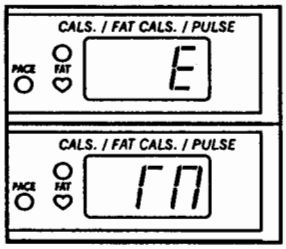

CALS./FAT CALS./PULSE display—When the chest pulse sensor is worn, this display shows three numbers: the approximate number of calories you have burned, the number of fat calories you have burned, and your heart rate. The display will change from one number to the next every seven seconds. When the number of fat calories is shown, the "fat" indicator beside the display will light; when your heart rate is shown, the heart-shaped indicator will flash with each heartbeat; when the number of calories is shown, no indicator will light. Note: If the chest pulse sensor is not worn, the display will show only the numbers of calories and fat calories burned.

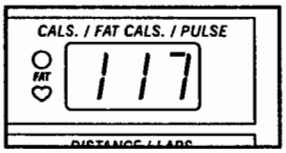

DISTANCE/LAPS display—This display shows the distance that you have walked and the total number of 1/4-mile laps you have completed. The display will change from one number to the other every seven seconds. The LAPS indicator will light when the number of laps is shown. Note: If the speed is shown in miles per hour, the distance will be shown in miles; if the speed is shown in kilometers per hour, the distance will be shown in kilometers. (See SPEED/INCLINE display at the left.)

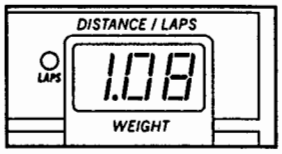

9 **When you are finished exercising, stop the walking belt and remove the key.**

Step onto the foot rails and press the STOP/PAUSE button. **Next, change the incline of the treadmill to 1.5%. The incline must be at 1.5% before the treadmill is folded to the storage position or the treadmill may be damaged.** Remove the key from the console. Store the key in a secure place. In addition, press the on/off switch to the "off" position. (See the drawing on page 11.)

HOW TO USE THE SPEED PROGRAMS

The console offers four speed programs: AEROBIC, INTERVAL 20 MIN., WEIGHT LOSS, and INTERVAL 30 MIN. Each program automatically controls the speed of the treadmill as it guides you through an effective workout. Follow the steps below to use a speed program.

1 Insert the key fully into the console.

See HOW TO TURN ON THE POWER on page 11.

2 Select the desired speed program.

When the key is inserted, the manual mode will automatically be selected, as shown by the MANUAL indicator. Press the PROGRAM SELECT button repeatedly until one of the four speed program indicators lights. The TIME/PACE display will show how long the selected program will last. Note: If the walking belt is moving when a speed program is selected, the walking belt will slow to a stop. In addition, if the incline of the treadmill is higher than 1.5%, it will automatically decrease to 1.5%.

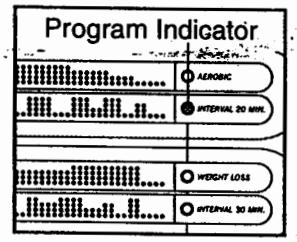

3 Put on the chest pulse sensor, if desired.

If you want to wear the chest pulse sensor, see HOW TO USE THE CHEST PULSE SENSOR on page 7.

4 Enter your weight, if desired.

If your weight is entered into the console, the console will more accurately measure the calories and fat calories you burn. To enter your weight, see step 4 on page 12.

Note: Although the letters "AGE" appear in the SPEED/INCLINE display, it is not necessary to enter your age to use a speed program. If you want to enter your age at this time, see step 5 on page 15.

5 Press the START button to start the program.

A moment after the button is pressed, the walking belt will begin to move at 1.0 mph. Hold the handrails and begin walking.

As the program progresses, the speed of the walking belt will change periodically as shown by the graphs on the left side of the console. The incline of the treadmill can be changed as desired during the program with the INCLINE buttons. When only ten seconds remain in the program, the incline of the treadmill will automatically decrease to 1.5%. When no time remains in the TIME/PACE display, the walking belt will slow to a stop and the program will end.

Note: To stop the program for a moment, press the STOP/PAUSE button. All displays will pause and the TIME/PACE display will begin to flash. To restart the program, press the START button. To end the program before it is completed, hold down the STOP/PAUSE button for two seconds.

Note: While the program is running, the difficulty level of the program can be adjusted, if desired. Press the SPEED △ button. A number will flash in the SPEED/INCLINE display for three seconds. This number is the *maximum speed setting* of the program. Press the SPEED △ button again. Each time the button is pressed, the maximum speed setting and all other speed settings of the program will increase slightly. The SPEED ▽ button can be used in the same way to decrease the difficulty level of the program.

6 Follow your progress with the LED track and the four displays.

See step 8 on page 12.

7 When the program is completed, remove the key.

Step onto the foot rails. **Make sure that the incline of the treadmill is set at 1.5%.** Remove the key from the console. Store the key in a secure place. In addition, press the on/off switch to the "off" position. (See the drawing on page 11.)

HOW TO USE THE HEART RATE PROGRAMS

The console offers two heart rate programs: the FAT BURN program and the AEROBIC program. Each program will automatically control the speed and incline of the treadmill to keep your heart rate near predetermined settings. Follow the steps below to use a heart rate program.

1 Insert the key fully into the console.

See HOW TO TURN ON THE POWER on page 11.

2 Select the desired heart rate program.

When the key is inserted, the manual mode will automatically be selected, as shown by the MANUAL indicator. Press the PROGRAM SELECT button repeatedly until the FAT BURN or AEROBIC indicator lights. The TIME/PACE display will show that the program will last for 30 minutes, and the letters "AGE" will begin to flash in the SPEED/INCLINE display.

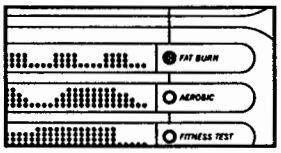

Note: If the walking belt is moving when a heart rate program is selected, the walking belt will slow to a stop. In addition, if the incline of the treadmill is higher than 1.5%, it will automatically decrease to 1.5%.

3 Put on the chest pulse sensor.

You must wear the chest pulse sensor to use a heart rate program. See HOW TO USE THE CHEST PULSE SENSOR on page 7.

4 Enter your weight, if desired.

If your weight is entered into the console, the console will more accurately measure the calories and fat calories you burn. To enter your weight, see step 4 on page 12.

5 Enter your age.

You must enter your age into the console to use a heart rate program. To enter your age, press one of the SET AGE buttons. The current age setting will appear in the SPEED/INCLINE display. Press the SET AGE buttons again to enter your age. Each time one of the buttons is pressed, the age setting will change by 1 year. If one of the buttons is held down, the age setting will change in increments of 5 years. Once your age is entered, it will be saved in the console's memory. **If you have already entered your age, you must press one of the SET AGE buttons to verify the age setting.**

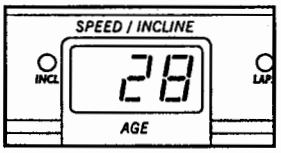

6 Press the START button to start the program.

A moment after the button is pressed, the walking belt will begin to move at 1.5 mph. Hold the handrails and begin walking.

As the program progresses, the speed and incline of the treadmill will change periodically to keep your heart rate near predetermined settings, shown by the graphs on the left side of the console. When only ten seconds remain in the program, the incline of the treadmill will automatically decrease to 1.5%. When no time remains in the TIME/PACE display, the walking belt will slow to a stop and the program will end.

Note: If your heart rate is not detected during the program, the letters "PLS" will flash in the CALS./FAT CALS./PULSE display and the speed and/or incline of the treadmill may automatically decrease. See CHEST PULSE SENSOR TROUBLE-SHOOTING on page 7.

Note: To stop the program for a moment, press the STOP/PAUSE button. All displays will pause and the TIME/PACE display will begin to flash. To restart the program, press the START button. To end the program before it is completed, hold down the STOP/PAUSE button for two seconds.

Note: While the program is running, minor adjustments can be made to the speed and incline of the treadmill with the SPEED and INCLINE buttons. However, if you *increase* the speed, the incline will automatically *decrease*; if you *decrease* the speed, the incline will *increase*. If you *increase* the incline, the speed will automatically *decrease*; if you *decrease* the incline, the speed will *increase*. *The console will always attempt to keep your heart rate near predetermined settings.* When the incline reaches the lowest setting, the speed cannot be increased any further. When the incline reaches the highest setting, the speed cannot be decreased any further.

7 **Follow your progress with the LED track and the four displays.**

See step 8 on page 12.

8 **When the program is completed, remove the key.**

Step onto the foot rails. **Make sure that the incline of the treadmill is set at 1.5%.** Remove the key from the console. Store the key in a secure place. In addition, press the on/off switch to the "off" position. (See the drawing on page 11.)

HOW TO USE THE FITNESS TEST PROGRAM

The FITNESS TEST program is designed to measure the relative fitness level you have achieved. For the best results, the program should be used at a time when your energy level is high; the program should not be used if you have already exercised during the day.

The FITNESS TEST program consists of seven 4-minute periods, and is followed by a 2-minute cool-down period. The speed and/or incline of the treadmill will automatically increase at the beginning of each period. Follow the steps below to use the program.

1 **Insert the key fully into the console.**

See HOW TO TURN ON THE POWER on page 11.

2 **Select the FITNESS TEST program.**

When the key is inserted, the manual mode will automatically be selected, as shown by the MANUAL indicator. Press the PROGRAM SELECT button repeatedly until the FITNESS TEST indicator lights. The letters "AGE" will begin to flash in the SPEED/INCLINE display. Note: If the walking belt is moving when the FITNESS TEST program is selected, the walking belt will slow to a stop. In addition, if the incline of the treadmill is higher than 1.5%, it will automatically decrease to 1.5%.

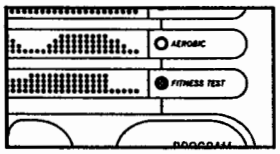

3 **Put on the chest pulse sensor.**

You must wear the chest pulse sensor to use the FITNESS TEST program. See HOW TO USE THE CHEST PULSE SENSOR on page 7. Note: The program can be started without your heart rate being detected; however, the program will automatically stop if your heart rate is not detected 4 minutes after the program is started.

4 **Enter your age.**

You must enter your age into the console to use the FITNESS TEST program. To enter your age, see step 5 on page 15. **If you have already entered your age, you must press one of the SET AGE buttons to verify the age setting.**

5 **Press the START button to start the program.**

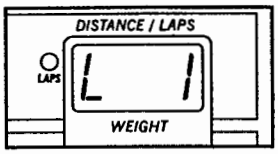

When the START button is pressed, the TIME/PACE display will begin counting up and the DISTANCE/LAPS display will show an "L 1" (level 1), indicating that the first 4-minute period of the FITNESS TEST program has begun. The incline of the treadmill will automatically adjust to 3%, and the walking belt will begin to move at 1.5 mph. Hold the handrails and begin walking.

When the first 4-minute period of the program is completed, the DISTANCE/LAPS display will show an "L 2," indicating that the second 4-minute period has begun. The incline will increase to 4%, and the speed will increase to 2.5 mph. At the beginning of each 4-minute period, the speed and/or incline of the treadmill will automatically increase. The FITNESS TEST will continue in this manner *until your heart rate reaches 70% of your theoretical maximum heart rate, and the current 4-minute period is completed. The FITNESS TEST will then end, regardless of how many periods remain.*

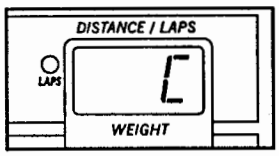

When the FITNESS TEST is completed, the letter "C" will be shown in the DISTANCE/LAPS display, indicating that the cool-down period has begun. The TIME/PACE display will then begin counting down. When only ten seconds remain in the cool-down period, the incline of the treadmill will automatically decrease to 1.5%.

When the cool-down period is completed, the walking belt will slow to a stop. Your fitness level will then be shown in the TIME/PACE display. There are ten fitness levels—fitness level 10 (FL10) is the highest. Remember, the FITNESS TEST is intended only to indicate the relative fitness level you have achieved.

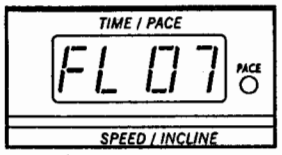

Note: The SPEED and INCLINE buttons will not function while the FITNESS TEST program is running. If your heart rate is not detected during the program, the letters "PLS" will flash in the CALS./FAT CALS./PULSE display. If your heart rate is not detected during the last thirty seconds of any 4-minute period (after 4 minutes, after 8 minutes, etc.), the walking belt will slow to a stop, the FITNESS TEST will end, and the TIME/PACE display will show a fitness level of 0 (FL00). (See CHEST PULSE SENSOR TROUBLE-SHOOTING on page 7.)

Note: The FITNESS TEST program cannot be stopped for a moment and then restarted. However, the program can be stopped at any time by pressing the STOP button. The TIME/PACE display will then show an estimated fitness level.

6 When the program is completed, remove the key.

Step onto the foot rails. **Make sure that the incline of the treadmill is set at 1.5%.** Remove the key from the console. Store the key in a secure place. In addition, press the on/off switch to the "off" position. (See the drawing on page 11.)

HOW TO CREATE A CUSTOM PROGRAM

Custom programs are workout programs that you create. The programs automatically control the speed and incline of the treadmill, and can be up to 40 minutes long. The programs are stored in the console's memory, and can be changed as many times as desired. Follow the steps below to create a custom program.

1 Insert the key into the console.

See HOW TO TURN ON THE POWER on page 11.

2 Select one of the custom programs.

When the key is inserted, the manual mode will automatically be selected, as shown by the MANUAL indicator. To select one of the custom programs, press the USER 1 or USER 2 button. The letters "CP1" or "CP2" will appear in the CALS./FAT CALS./PULSE display to show which program you have selected. The TIME/PACE display will show how long the program is set to last. (The program can be set to last for a different length of time, as explained later.) Note: If the walking belt is moving when a custom program is selected, the walking belt will slow to a stop. In addition, if the incline of the treadmill is higher than 1.5%, it will automatically decrease to 1.5%.

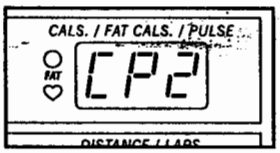

3 Put on the chest pulse sensor, if desired.

If you want to wear the chest pulse sensor, see HOW TO USE THE CHEST PULSE SENSOR on page 7.

4 Enter your weight, if desired.

If your weight is entered into the console, the console will more accurately measure the calories and fat calories you burn. To enter your weight, see step 4 on page 12.

5 Press the START button to start the program.

A moment after the button is pressed, the walking belt will begin to move. Hold the handrails and begin walking.

6 Press the RECORD button and program the desired speed and incline settings.

When the RECORD button is pressed, the indicator on the button will light. **Speed and incline settings can be programmed only when the indicator on the button is lit.**

Each custom program is divided into one-minute periods. One speed setting and one incline setting can be programmed for each period. To program speed and incline settings for the first one-minute period of the program, simply adjust the speed and incline of the treadmill as desired with the SPEED and INCLINE buttons.

When the first one-minute period of the program is completed, the current speed and incline settings will be stored in the console's memory. Program speed and incline settings for the second one-minute period in the same way. Repeat this procedure until you have programmed speed and incline settings for as many one-minute periods as desired. Custom programs can have up to forty periods.

Note: To stop the program for a moment, press the STOP/PAUSE button. All displays will pause and the TIME/PACE display will begin to flash. To restart the program, press the START button.

7 Hold down the STOP/PAUSE button for two seconds.

When you have programmed speed and incline settings for as many one-minute periods as desired, hold down the STOP/PAUSE button for two seconds. The speed and incline settings that you have programmed and the length of the program will be stored in the console's memory. To use the program again, see HOW TO USE A CUSTOM PROGRAM at the right.

8 When the program is completed, remove the key.

Step onto the foot rails. **Make sure that the incline of the treadmill is set at 1.5%.** Remove the key from the console. Store the key in a secure place. In addition, press the on/off switch to the off position. (See the drawing on page 11.)

HOW TO USE A CUSTOM PROGRAM

1 Insert the key into the console.

See HOW TO TURN ON THE POWER on page 11.

2 Select one of the custom programs.

When the key is inserted, the manual mode will automatically be selected, as shown by the MANUAL indicator. To select one of the custom programs, press the USER 1 or USER 2 button. The letters "CP1" or "CP2" will appear in the CALS./FAT CALS./PULSE display to show which program you have selected. The TIME/PACE display will show how long the program is set to last. Note: If the walking belt is moving when a custom program is selected, the walking belt will slow to a stop. In addition, if the incline of the treadmill is higher than 1.5%, it will automatically decrease to 1.5%.

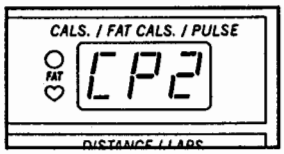

3 Put on the chest pulse sensor, if desired.

If you want to wear the chest pulse sensor, see HOW TO USE THE CHEST PULSE SENSOR on page 7.

4 Enter your weight, if desired.

If your weight is entered into the console, the console will more accurately measure the calories and fat calories you burn. To enter your weight, see step 4 on page 12.

5 Press the START button.

A moment after the button is pressed, the walking belt will begin to move. Hold the handrails and begin walking.

During the first one-minute period of the program, the speed and incline of the treadmill will automatically adjust to the first settings that you programmed previously. When the first one-minute period of the program is completed, the speed and incline of the treadmill will automatically adjust to the second settings that you programmed. When the second period of the program is completed, the speed and incline of the treadmill will automatically adjust to the third settings that you programmed. The program will continue in this way until no time remains in the TIME/PACE display. The walking belt will then slow to a stop.

Note: To stop the program for a moment, press the STOP/PAUSE button. All displays will pause and the TIME/PACE display will begin to flash. To restart the program, press the START button. To end the program before it is completed, hold down the STOP/PAUSE button for two seconds.

Note: While the program is running, the speed and incline of the treadmill can be adjusted with the SPEED and INCLINE buttons. Adjustments will not be stored in the console's memory. To **reprogram** the speed and incline settings of the current one-minute period of the program, press the RECORD button. The indicator on the button will light. **Speed and incline settings can be reprogrammed only when the indicator on the button is lit.** Next, adjust the speed and incline of the treadmill with the SPEED and INCLINE buttons. *When the current period is completed,* the new speed and incline settings will be stored in memory. When you have reprogrammed speed and incline settings for as many periods as desired, press the RECORD button again.

6 Follow your progress with the four displays.

Refer to step 8 on page 12.

7 When the program is completed, remove the key.

Step onto the foot rails. **Next, change the incline of the treadmill to 1.5%.** Remove the key from the console. Store the key in a secure place. In addition, press the on/off switch to the "off" position. (See the drawing on page 11.)

HOW TO SELECT THE INFORMATION MODE

The console features an information mode that keeps track of the total time and distance accumulated on the treadmill.

To access the information mode, hold down the STOP/PAUSE button, insert the key into the console, and continue holding the STOP/PAUSE button for a moment. The TIME/PACE display will show the total number of hours that the treadmill has been used. The DISTANCE/LAPS display will show the total number of miles accumulated. The CALS./FAT CALS./PULSE display will show an "E" (for english miles) or an "M" (for metric kilometers) (see SPEED/INCLINE DISPLAY on page 13).

To exit the information mode, remove the key.

HOW TO FOLD AND MOVE THE TREADMILL

HOW TO FOLD THE TREADMILL FOR STORAGE

Before folding the treadmill, adjust the incline to the lowest position. **If the incline is not at the lowest position, the treadmill will be permanently damaged. Next, unplug the power cord. Caution: You must be able to safely lift 45 pounds (20 kg) in order to raise, lower, or move the treadmill.**

1. Hold the treadmill with your hands in the locations shown at the right. **Caution: To avoid pinching your hands, do not hold the treadmill in the locations indicated by the arrows. To decrease the possibility of injury, bend your legs and keep your back straight. As you raise the treadmill, make sure to lift with your legs rather than your back.** Raise the treadmill about halfway to the vertical position.

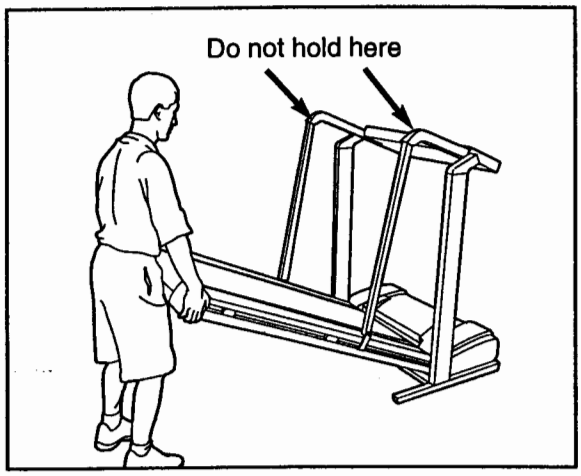

2. Move your right hand to the position shown and hold the treadmill firmly. Raise the treadmill until the storage latch closes over the catch. **Make sure that the storage latch closes fully over the catch.**

   To protect the floor or carpet from damage, place a mat under the treadmill. Keep the treadmill out of direct sunlight. Do not leave the treadmill in the storage position in temperatures above 85° Fahrenheit.

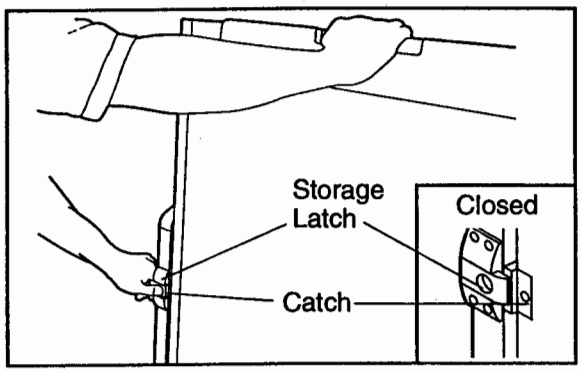

HOW TO MOVE THE TREADMILL

Before moving the treadmill, convert the treadmill to the storage position as described above. **Make sure that the storage latch is closed fully over the catch.**

1. Hold the upper ends of the treadmill. Place one foot on the base as shown.
2. Tilt the treadmill back until it rolls freely on the wheels. Carefully move the treadmill to the desired location. **To reduce the risk of injury, use extreme caution while moving the treadmill. Do not attempt to move the treadmill over an uneven surface.**
3. Place one foot on the base, and carefully lower the treadmill until it is resting in the storage position.

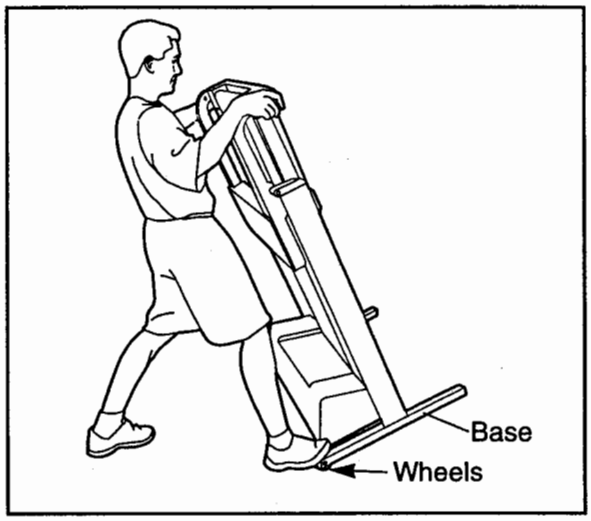

HOW TO LOWER THE TREADMILL FOR USE

1. Hold the upper end of the treadmill with your right hand as shown. Using your left thumb, slide open the storage latch and hold it open. Pivot the treadmill until the frame is past the storage latch.

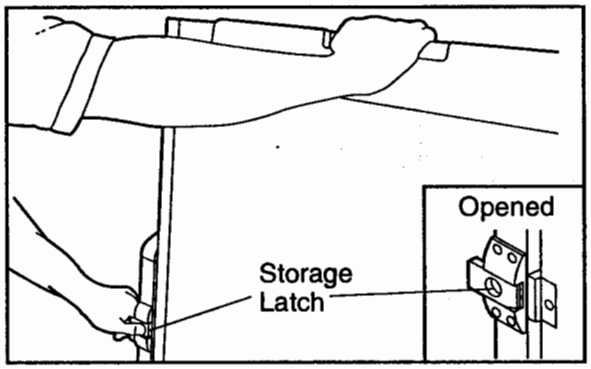

2. Hold the treadmill firmly with both hands, and lower the treadmill to the floor. **Caution: To avoid pinching your hands, do not hold the treadmill in the locations indicated by the arrows. To decrease the possibility of injury, bend your legs and keep your back straight.**

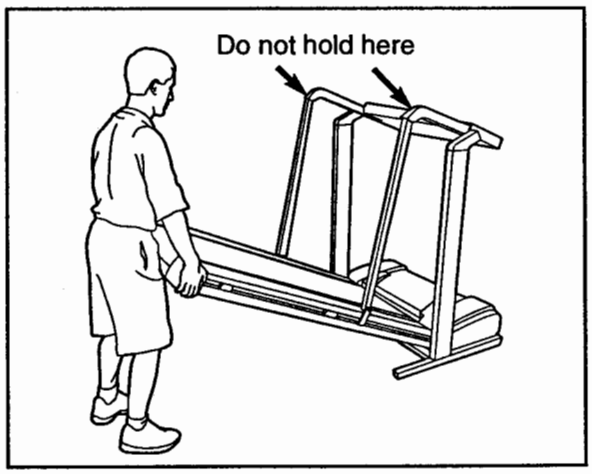

MAINTENANCE AND TROUBLE-SHOOTING

Most treadmill problems can be solved by following the steps below. Find the symptom that applies, and follow the steps listed. If further assistance is needed, please call our Customer Service Department toll-free at 1-800-999-3756, Monday through Friday, 6 a.m. until 6 p.m. Mountain Time (excluding holidays).

PROBLEM: The power does not turn on

SOLUTION: a. Make sure that the power cord is plugged into a surge protector, and that the surge protector is plugged into a properly grounded outlet. (See HOW TO PLUG IN THE POWER CORD on page 9.) Use only a UL-listed surge protector, rated at 15 amps, with a 14-gauge cord of five feet or less in length.

b. After the power cord has been plugged in, make sure that the key is fully inserted into the console.

c. Check the circuit breaker located on the treadmill near the power cord. If the switch protrudes as shown, the circuit breaker has tripped. To reset the circuit breaker, wait for five minutes and then press the switch back in.

d. Check the on/off switch located at the front of the treadmill near the power cord. The switch must be in the on position.

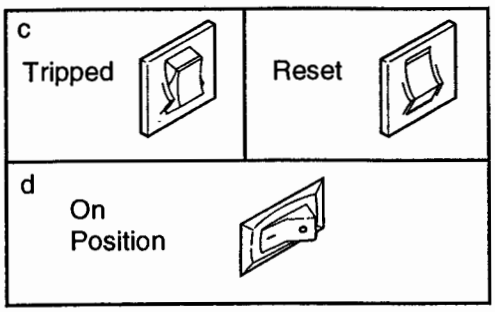

PROBLEM: The power turns off during use

SOLUTION: a. Check the circuit breaker located on the treadmill frame near the power cord (see 1. c. above). If the circuit breaker has tripped, wait for five minutes and then press the switch back in.

b. Make sure that the power cord is plugged in.

c. Remove the key from the console. Reinsert the key fully into the console.

d. Make sure that the on/off switch is in the on position. (See 1. d. above.)

e. If the treadmill still will not run, please call our Customer Service Department, toll-free.

PROBLEM: The walking belt is off-center or slips when walked on

SOLUTION: a. **If the walking belt has shifted to the left**, first remove the key and **UNPLUG THE POWER CORD**. Using the allen wrench, turn the left rear roller adjustment bolt clockwise, and the right bolt counterclockwise, 1/4 of a turn each. Be careful not to overtighten the walking belt. Plug in the power cord, insert the key and run the treadmill for a few minutes. Repeat until the walking belt is centered.

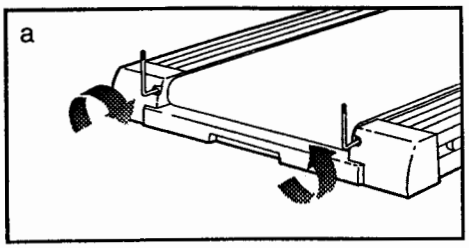

b. **If the walking belt has shifted to the right**, first remove the key and **UNPLUG THE POWER CORD**. Using the allen wrench, turn the left rear roller adjustment bolt counterclockwise, and the right bolt clockwise, 1/4 of a turn each. Be careful not to overtighten the walking belt. Plug in the power cord, insert the key and run the treadmill for a few minutes. Repeat until the walking belt is centered.

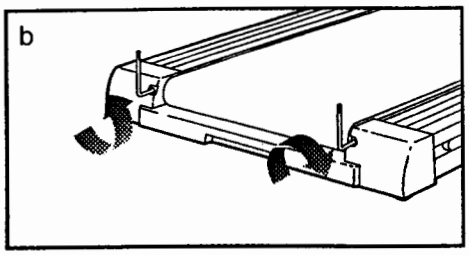

c. **If the walking belt slips when walked on**, first remove the key and **UNPLUG THE POWER CORD.** Using the allen wrench, turn both rear roller adjustment bolts clockwise, 1/4 of a turn. When the walking belt is correctly tightened, you should be able to lift each side of the walking belt 3 to 4 inches off the walking platform. Be careful to keep the walking belt centered. Plug in the power cord, insert the key and run the treadmill for a few minutes. Repeat until the walking belt is properly tightened.

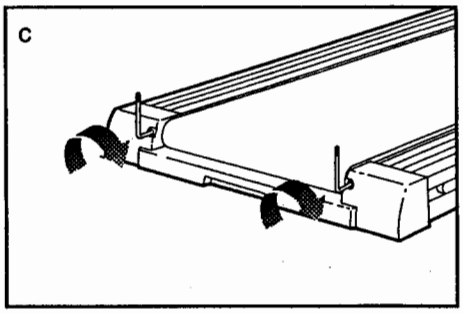

PROBLEM: The walking belt slows when walked on

SOLUTION: a. Use only a UL-listed surge protector, rated at 15 amps, with a 14-gauge cord of five feet or less in length.

b. If the walking belt is overtightened, treadmill performance may decrease and the walking belt may be permanently damaged. Remove the key and **UNPLUG THE POWER CORD.** Using the allen wrench, turn both rear roller adjustment bolts counterclockwise, 1/4 of a turn. When the walking belt is properly tightened, you should be able to lift each side of the walking belt 3 to 4 inches off the walking platform. Be careful to keep the walking belt centered. Plug in the power cord, insert the key and run the treadmill for a few minutes. Repeat until the walking belt is properly tightened.

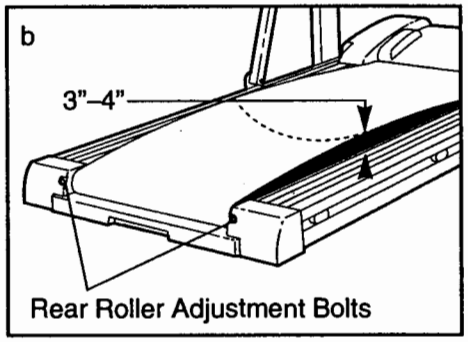

c. If the walking belt still slows when walked on, please call our toll-free Customer Service Department.

PROBLEM: The heart rate monitor does not function properly

SOLUTION: a. If the heart rate monitor does not function properly, refer to CHEST PULSE SENSOR TROUBLESHOOTING on page 7.

b. **The CR 2032 battery may need to be replaced.**

To replace the battery, locate the battery cover on the back of the sensor unit. Insert a coin into the slot in the cover, turn the cover counterclockwise, and remove it.

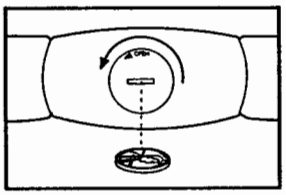

Remove the old battery and insert a new CR 2032 battery, making sure that the battery is turned so the writing is on top. Make sure that the rubber gasket is in place in the sensor unit. Replace the battery cover and turn it clockwise to close it.

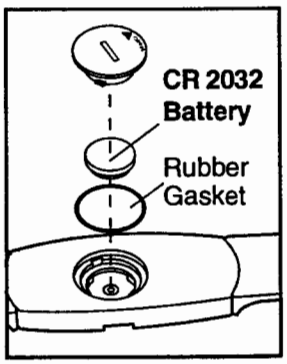

CONDITIONING GUIDELINES

⚠ WARNING: Before beginning this or any exercise program, consult your physician. This is especially important for individuals over the age of 35 or individuals with pre-existing health problems.

The following guidelines will help you to plan your exercise program. Remember—these are general guidelines. For more detailed information about exercise, obtain a book or consult your physician.

EXERCISE INTENSITY

Whether your goal is to burn fat or strengthen your cardiovascular system, the key to achieving the desired results is to exercise with the proper intensity. The proper intensity level can be found by using your heart rate as a guide. For effective exercise, your heart rate should be maintained at a level between 71.5% and 85% of your maximum heart rate as you exercise. This is known as your training zone.

You can find your training zone in the table below. Training zones are listed according to age and physical condition.

Age	Training Zone (Beats/Min.)	
	Unconditioned	Conditioned
20	138-167	133-162
25	136-166	132-160
30	135-164	130-158
35	134-162	129-156
40	132-161	127-155
45	131-159	125-153
50	129-156	124-150
55	127-155	122-149
60	126-153	121-147
65	125-151	119-145
70	123-150	118-144
75	122-147	117-142
80	120-146	115-140
85	118-144	114-139

Burning Fat

To burn fat, you must exercise at a low intensity level for a sustained period of time. During the first few minutes of exercise, your body uses easily accessible *carbohydrate* calories for energy. Only after the first few minutes of exercise does your body begin to use stored *fat* calories for energy. If your goal is to burn fat, adjust the intensity of your exercise until your heart rate is near the low end of your training zone as you exercise.

⚠ WARNING: The pulse sensors are not medical devices. Various factors, including your movement, may affect the accuracy of heart rate readings. The pulse sensors are intended only as exercise aids in determining heart rate trends in general.

Aerobic Exercise

If your goal is to strengthen your cardiovascular system, your exercise must be "aerobic." Aerobic exercise is activity that requires large amounts of oxygen for prolonged periods of time. This increases the demand on the heart to pump blood to the muscles, and on the lungs to oxygenate the blood. For aerobic exercise, adjust the intensity of your exercise until your heart rate is near the middle of your training zone.

WORKOUT GUIDELINES

Each workout should include the following three important parts: (1) a warm-up, (2) training zone exercise, and (3) a cool-down.

Warm-up

Warming up prepares the body for exercise by increasing circulation, delivering more oxygen to the muscles, and raising the body temperature. Begin each workout with 5 to 10 minutes of stretching and light exercise to warm up (see SUGGESTED STRETCHES on page 25).

Training Zone Exercise

After warming up, increase the intensity of your exercise until your heart rate is in your training zone for 20 to 60 minutes. (During the first few weeks of your exercise program, do not keep your heart rate in your training zone for longer than 20 minutes.) Breathe regularly and deeply as you exercise—never hold your breath.

Cool-down

Finish each workout with 5 to 10 minutes of stretching to cool down. This will increase the flexibility of your muscles and will help to prevent post-exercise problems.

Exercise Frequency

To maintain or improve your condition, complete three workouts each week, with at least one day of rest between workouts. After a few months, you may complete up to five workouts each week if desired.

The key to success is to make exercise a regular and enjoyable part of your everyday life.

SUGGESTED STRETCHES

The correct form for several basic stretches is shown at the right. Move slowly as you stretch—never bounce.

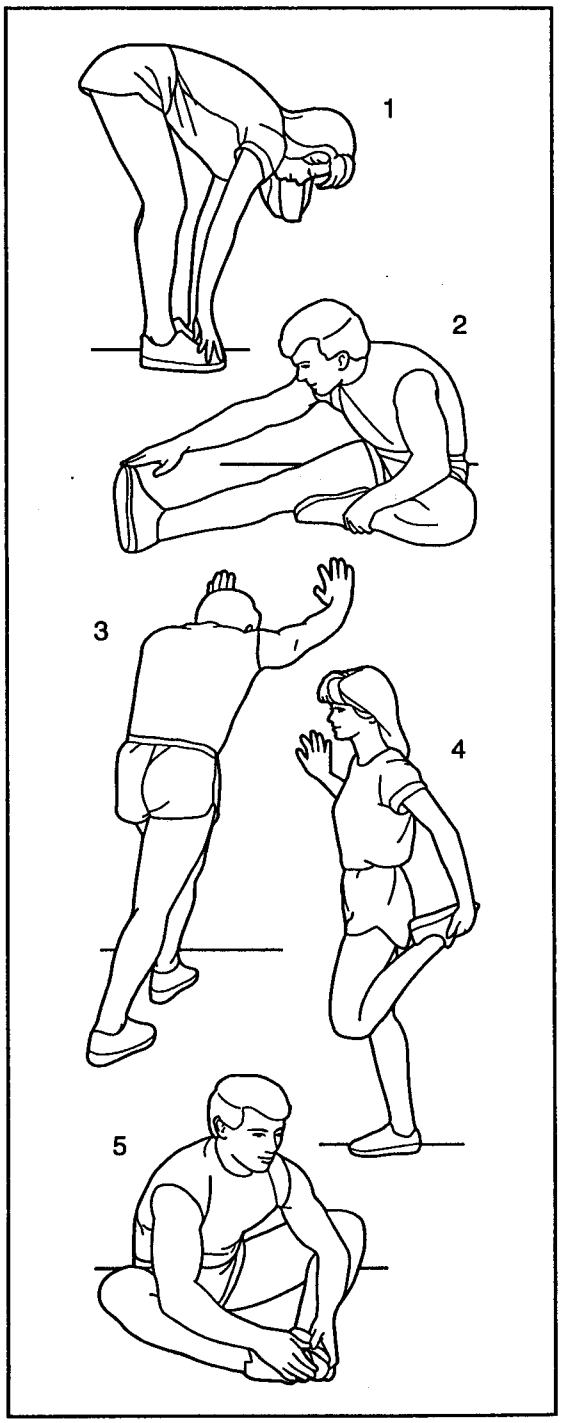

1. Toe Touch Stretch

Stand with your knees bent slightly and slowly bend forward from your hips. Allow your back and shoulders to relax as you reach down toward your toes as far as possible. Hold for 15 counts, then relax. Repeat 3 times. Stretches: Hamstrings, back of knees and back.

2. Hamstring Stretch

Sit with one leg extended. Bring the sole of the opposite foot toward you and rest it against the inner thigh of your extended leg. Reach toward your toes as far as possible. Hold for 15 counts, then relax. Repeat 3 times for each leg. Stretches: Hamstrings, lower back and groin.

3. Calf/Achilles Stretch

With one leg in front of the other, reach forward and place your hands against a wall. Keep your back leg straight and your back foot flat on the floor. Bend your front leg, lean forward and move your hips toward the wall. Hold for 15 counts, then relax. Repeat 3 times for each leg. To cause further stretching of the achilles tendons, bend your back leg as well. Stretches: Calves, achilles tendons and ankles.

4. Quadriceps Stretch

With one hand against a wall for balance, reach back and grasp one foot with your other hand. Bring your heel as close to your buttocks as possible. Hold for 15 counts, then relax. Repeat 3 times for each leg. Stretches: Quadriceps and hip muscles.

5. Inner Thigh Stretch

Sit with the soles of your feet together and your knees outward. Pull your feet toward your groin area as far as possible. Hold for 15 counts, then relax. Repeat 3 times. Stretches: Quadriceps and hip muscles.

PART LIST—Model No. PFTL72570

R0298A

To identify the parts listed below, refer to the EXPLODED DRAWING attached in the center of this manual.

Key No.	Qty.	Description
1	1	Frame
2	2	Rear Isolator
3	2	Rear Platform Screw
4	25	Screw
5	1	Catch
6	4	Isolator
7	2	Handrail Pivot Bolt
8	2	Handrail Arm Nut
9	1	Left Foot Rail
10	2	Handrail Arm
11	5	Incline Pivot Bolt
12	2	Incline Pivot Spacer
13	1	23" Cable Tie
14	1	8" Wire Harness
15	2	20" Optic Wire
16	1	Front Roller/Pulley
17	4	Platform Screw
18	2	Storage Warning Decal
19	1	Incline Frame
20	2	Hood Bracket
21	31	Small Screw
22	8	Incline Nut
23	2	Base Endcap
24	1	Incline Motor Spacer
25	2	Incline Motor Bolt
26	1	Incline Motor
27	1	Controller
28	1	Electronics Plate
29	1	Choke
30	1	Power Supply w/Clips
31	1	Power Cord
32	1	Power Cord Grommet
33	1	On/Off Switch
34	1	Outlet Bracket
35	1	Circuit Breaker
36	7	Adjustment Washer
37	1	Magnet
38	1	Front Belly Pan
39	1	Motor Pivot Bolt
40	1	Motor Pivot Nut
41	1	Pulley/Flywheel/Fan
42	1	Motor Belt
43	1	Motor
44	1	Optic Bracket Nut
45	1	Motor Tension Washer
46	1	Motor Tension Star Washer
47	10	Belly Pan Fastener
48	2	Belt Guide
49	2	Endcap Spacer
50	1	Frame Guide
51	1	Belly Pan
52	4	Handrail Washer
53	2	Rear Pad
54	1	Rear Endcap
55	1	Latch Warning Decal
56	2	Rear Roller Adj. Bolt
57	2	Handrail Bolt
58	1	Right Foot Rail
59	1	Walking Belt
60	1	Storage Latch Bracket
61	1	Front Roller Adj. Bolt
62	2	Handrail Bolt
63	2	Handrail Pivot Spacer
64	2	Handrail Pivot Cap
65	1	Safety Key/Clip
66	1	Latch Spacer
67	1	Ground Wire
68	2	Latch Spring
69	1	Storage Latch
70	1	Upright/Base
71	1	Book Holder
72	1	Right Handrail
73	1	Left Handrail
74	4	Console Base Screw
75	2	Wire Harness Grommet
76	1	Upright Wire Harness
77	4	Endcap Spacer Screw
78	1	Console
79	4	Plastic Stand-Off
80	8	Belly Pan Screw
81	4	Endcap Clip
82	1	Console Base
83	2	Handrail Cover
84	1	Motor Hood
85	1	Incline Motor Plate
86	2	Frame Pivot Washer
87	4	Incline Frame Bolt
88	4	Handrail Nut
89	6	Base Pad
90	1	Rear Roller
91	1	Wrench Clip
92	1	Allen Wrench
93	2	Extension Screw
94	2	Ground Screw
95	1	Incline Motor Shield
96	2	Wheel Bolt
97	2	Wheel
98	2	Wire Clip
99	2	Extension Leg
100	1	Shock

Key No.	Qty.	Description
101	1	8" Cable Tie
102	1	Cable Tie Clamp
103	1	Releasable Tie
104	1	Walking Platform
105	1	Front Hood Bracket
106	1	Motor/Pulley/Flywheel/Fan
107	2	Handrail Spacer
108	2	Small Star Washer
109	1	Battery Cover
110	1	Motor Locknut
111	2	Incline Stop Bracket
112	1	Upright Plug
113	1	Choke Bracket
114	2	Photo Switch
115	1	Optic Speed Disk
116	1	Optic Incline Disk
117	1	Optic Bracket
118	1	Pulse Sensor Unit
119	1	Chest Strap
120	2	Optic Switch Screw
121	2	Optic Switch Nut
122	2	Warning Decal
123	4	Latch Screw
#	1	14" White Wire, 2 Female
#	1	8" White Wire, Male/Female
#	1	8" Blue Wire, 2 Female
#	1	4" Blue Wire, 2 Female
#	1	9" Black Wire, Male/Female
#	1	4" Black Wire, 2 Female
#	1	8" Red Wire, Male/Female
#	1	8" Green Wire, Female/Ring

* Includes all parts shown in the box
# These parts are not illustrated

ORDERING REPLACEMENT PARTS

To order replacement parts, call our Customer Service Department toll-free at 1-800-999-3756, Monday through Friday, 6 a.m. until 6 p.m. Mountain Time (excluding holidays). When ordering parts, please be prepared to give the following information:

- The MODEL NUMBER OF THE PRODUCT (PFTL72570).
- The NAME OF THE PRODUCT (PROFORM® 725 treadmill).
- The SERIAL NUMBER OF THE PRODUCT (see the front cover of this manual).
- The KEY NUMBER AND DESCRIPTION OF THE PART(S) (see the PART LIST on page 15 and the EXPLODED DRAWING attached in the center of this manual).

If possible, place the treadmill near your telephone for easy reference when calling.

PROFORM is a registered trademark of ICON Health & Fitness, Inc.

LIMITED WARRANTY

ICON Health & Fitness, Inc. (ICON), warrants this product to be free from defects in workmanship and material, under normal use and service conditions, for a period of ninety (90) days from the date of purchase. This warranty extends only to the original purchaser. ICON's obligation under this warranty is limited to replacing or repairing, at ICON's option, the product at one of its authorized service centers. All products for which warranty claim is made must be received by ICON at one of its authorized service centers with all freight and other transportation charges prepaid, accompanied by sufficient proof of purchase. All returns must be pre-authorized by ICON. This warranty does not extend to any product or damage to a product caused by or attributable to freight damage, abuse, misuse, improper or abnormal usage or repairs not provided by an ICON authorized service center, to products used for commercial or rental purposes, or to products used as store display models. No other warranty beyond that specifically set forth above is authorized by ICON.

ICON is not responsible or liable for indirect, special or consequential damages arising out of or in connection with the use or performance of the product or damages with respect to any economic loss, loss of property, loss of revenues or profits, loss of enjoyment or use, costs of removal, installation or other consequential damages of whatsoever nature. Some states do not allow the exclusion or limitation of incidental or consequential damages. Accordingly, the above limitation may not apply to you.

The warranty extended hereunder is in lieu of any and all other warranties and any implied warranties of merchantability or fitness for a particular purpose is limited in its scope and duration to the terms set forth herein. Some states do not allow limitations on how long an implied warranty lasts. Accordingly, the above limitation may not apply to you.

This warranty gives you specific legal rights. You may also have other rights which vary from state to state.

ICON HEALTH & FITNESS, INC., 1500 S. 1000 W., LOGAN, UT 84321-9813

Part No. 141552 H00166-C R0298A

Printed in USA © 1998 ICON Health & Fitness, Inc.

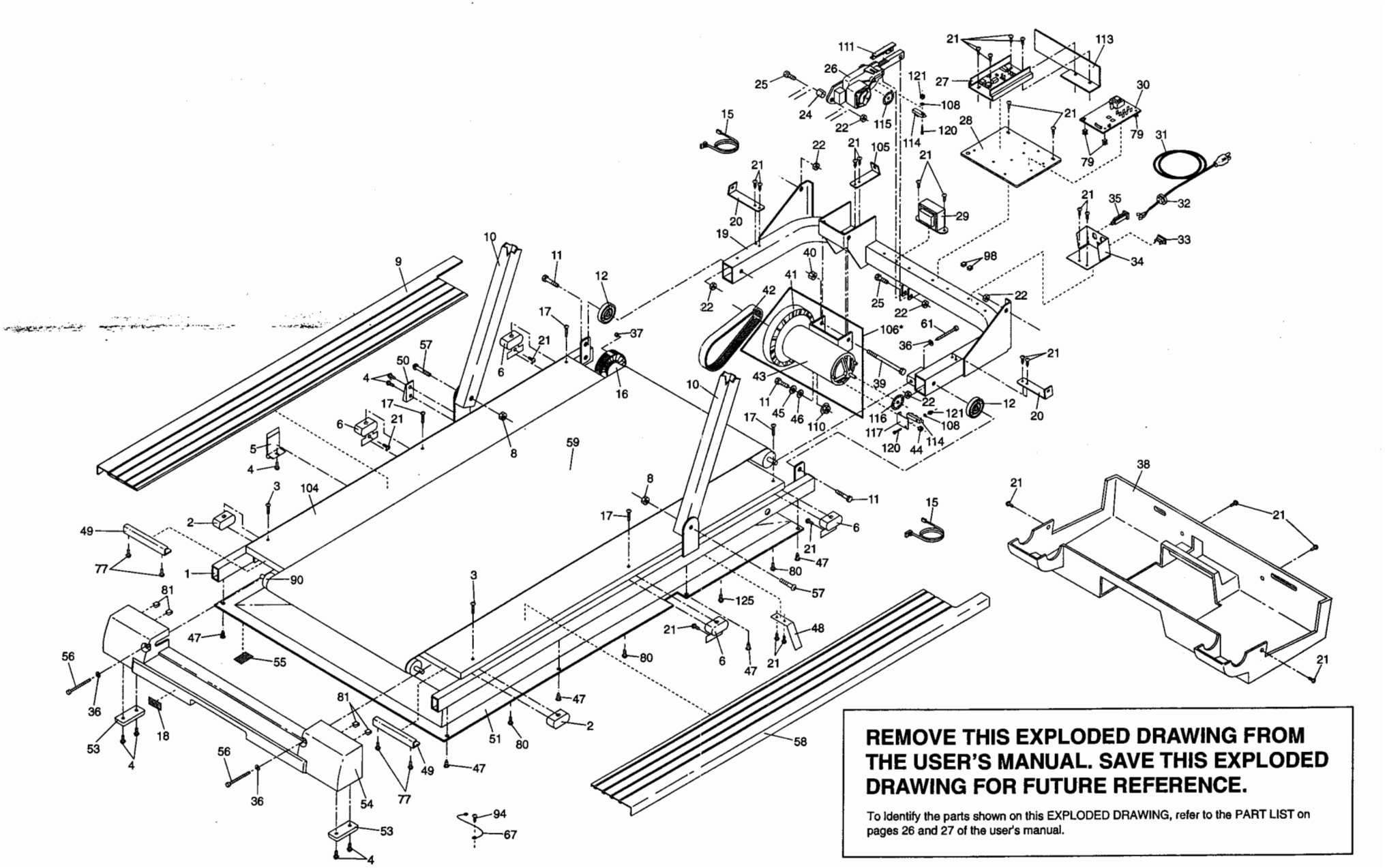

REMOVE THIS EXPLODED DRAWING FROM THE USER'S MANUAL. SAVE THIS EXPLODED DRAWING FOR FUTURE REFERENCE.

To Identify the parts shown on this EXPLODED DRAWING, refer to the PART LIST on pages 26 and 27 of the user's manual.

EXPLODED DRAWING—Model No. PFTL72570
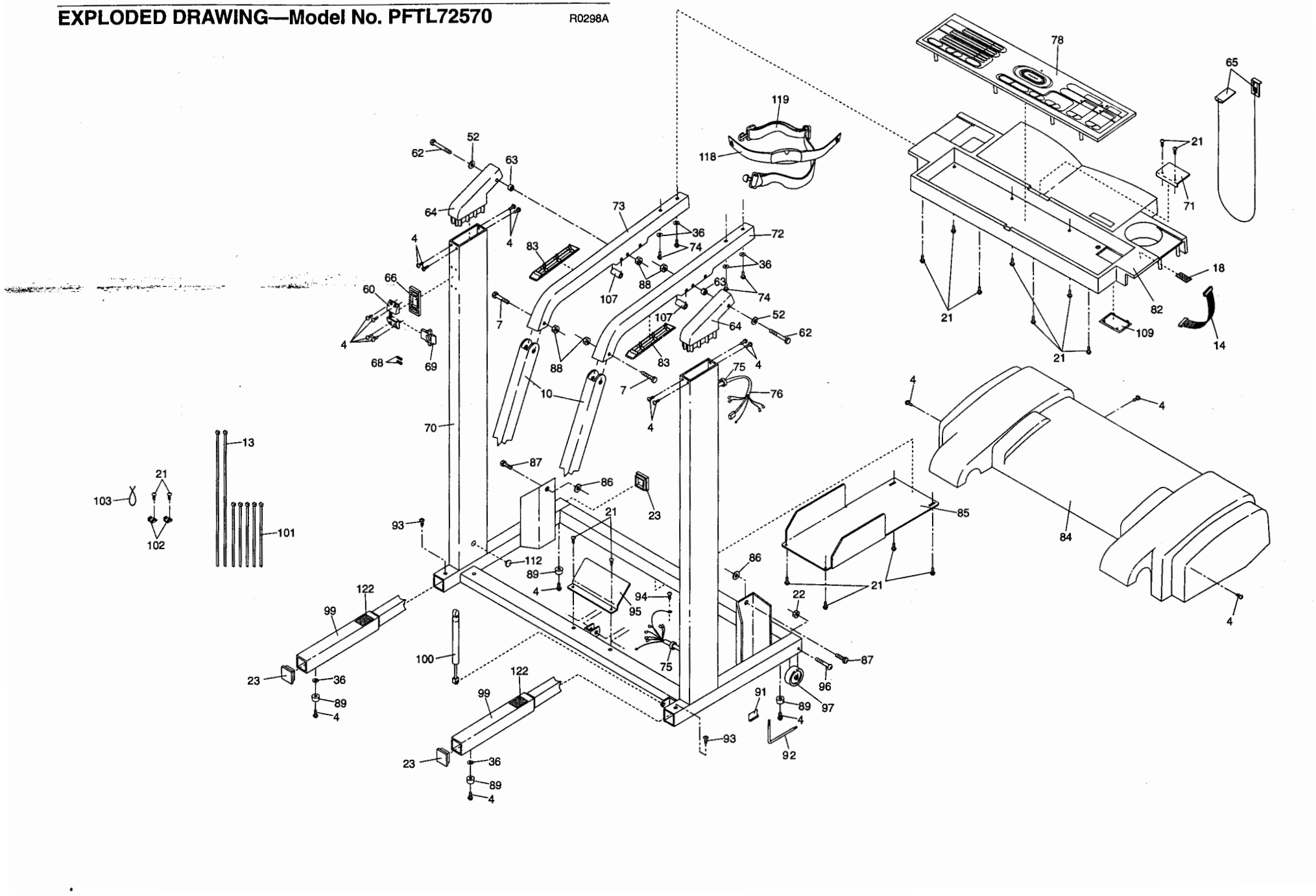
R0298A