PURSUIT™

MAGNETIC SILENT DRIVE • BELT DRIVE RESISTANCE

675

Model No. WLEX67540
Serial No._____

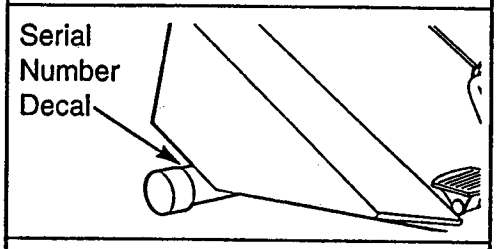

QUESTIONS?

As a manufacturer, we are committed to providing you complete customer satisfaction. If you have questions, or if there are missing or damaged parts, we guarantee you complete satisfaction through direct assistance from our factory.

TO AVOID UNNECESSARY DELAYS, PLEASE CALL DIRECT TO OUR TOLL-FREE CUSTOMER HOT LINE. Our trained technicians will provide immediate assistance, free of charge.

CUSTOMER HOT LINE:
1-800-999-3756
Mon.–Fri., 6 a.m.–6 p.m. MST

CAUTION!

Read all safety precautions and instructions in this manual carefully before using this equipment. Save this manual for future reference.

OWNER'S MANUAL

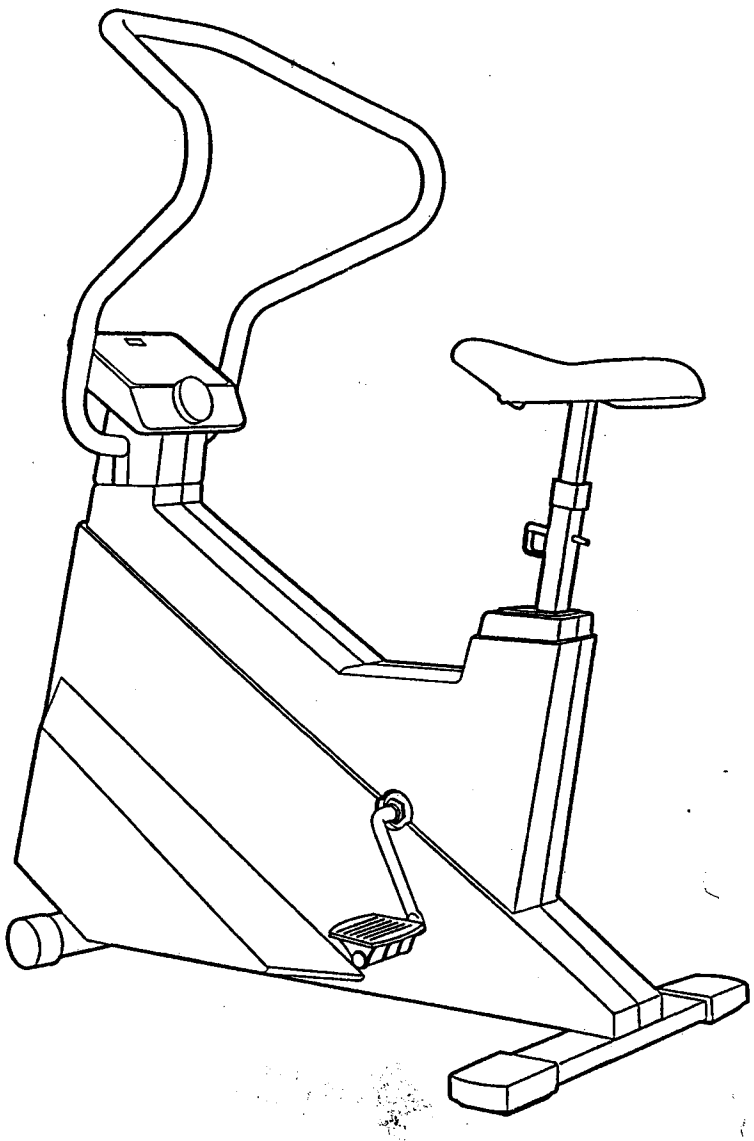

WESLO®

TABLE OF CONTENTS

IMPORTANT SAFETY PRECAUTIONS 2
BEFORE YOU BEGIN 3
ASSEMBLY 4
ADJUSTMENT AND OPERATION 6
TROUBLE-SHOOTING AND MAINTENANCE 8
CONDITIONING GUIDELINES 9
PART LIST 10
EXPLODED DRAWING 11
ORDERING REPLACEMENT PARTS . . . . . Back Cover
LIMITED WARRANTY . . . . . Back Cover

IMPORTANT SAFETY PRECAUTIONS

WARNING: To reduce the risk of serious injury, read the following important safety precautions before using the exercise bike.

1. **Place the exercise bike on a level surface. Do not use the exercise bike near water or outdoors.**

2. **Wear appropriate clothing when exercising; do not wear loose clothing that could become caught in the exercise bike. Always wear athletic shoes for foot protection.**

3. **When adjusting the seat, at least two inches of the seat post must be inside of the frame. The seat pin must be inserted from the front, as shown on page 3. If the seat pin is inserted from the back, it may slip out during use, resulting in injury.**

4. **Keep small children away from the exercise bike at all times.**

5. **Use the exercise bike only as described in this manual.**

WARNING: Before beginning this or any exercise program, consult your physician. This is especially important for persons over the age of 35 or persons with pre-existing health problems. Read all instructions before using this product. WESLO assumes no responsibility for personal injury or property damage sustained by or through the use of this product.

BEFORE YOU BEGIN

Congratulations for selecting the WESLO® PURSUIT 675 exercise bike. Cycling is one of the most effective exercises known for increasing cardiovascular fitness, building endurance and toning the entire body. The sophisticated PURSUIT 675 offers an impressive array of features to let you enjoy this healthful exercise in the convenience and privacy of your home.

For your safety and benefit, read this manual carefully before using the exercise bike. If you have additional questions, please call our Customer Service Department toll-free at **1-800-999-3756**, Monday through Friday, 6 a.m. until 6 p.m. Mountain Time (excluding holidays). To help us assist you, please mention the product model number and serial number when calling. The model number is WLEX67540. The serial number can be found on a decal attached to the exercise bike (see the front cover of this manual).

Before reading further, please look at the drawing below and familiarize yourself with the parts that are labeled.

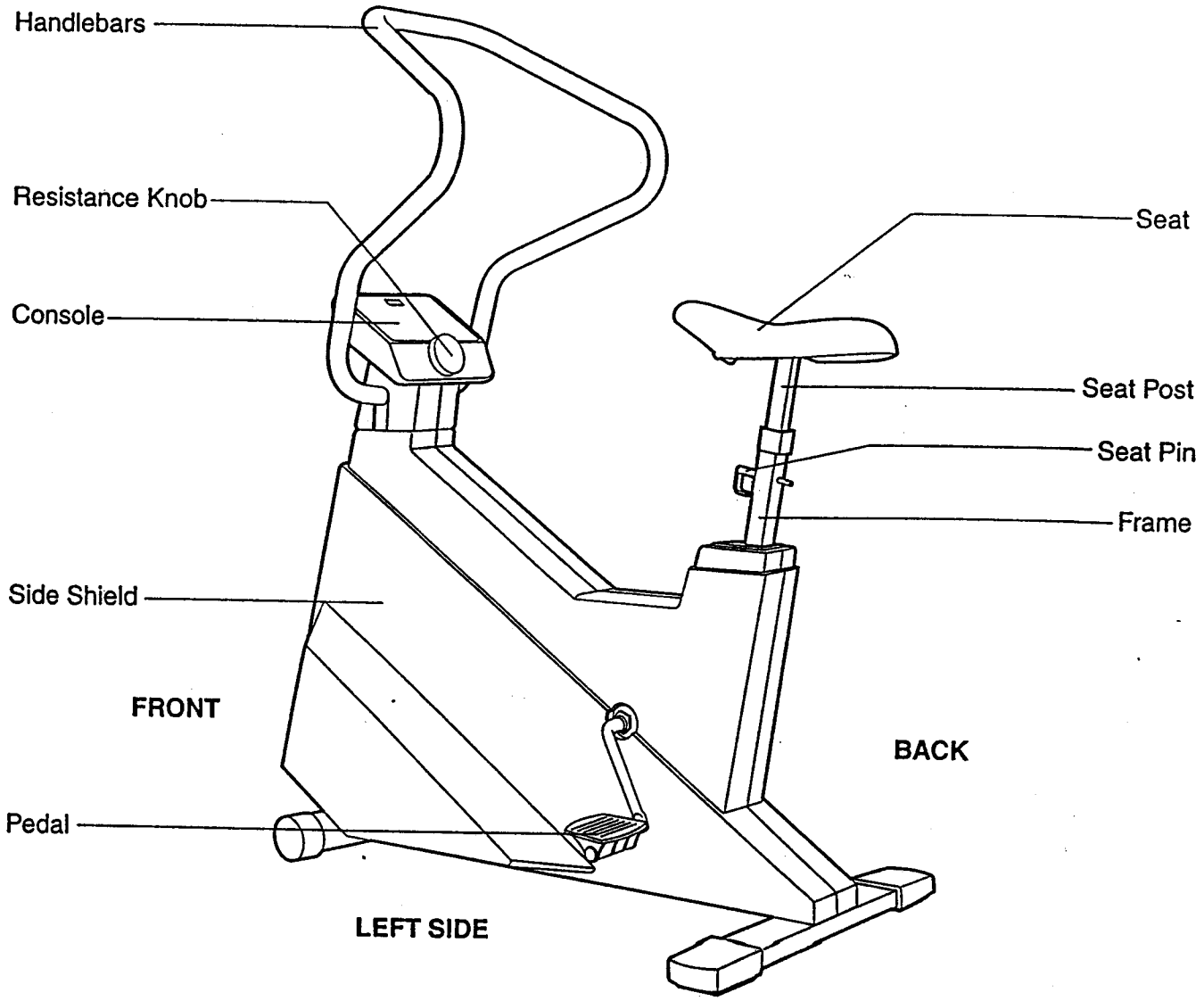

ASSEMBLY

Place all parts in a cleared area and remove the packing materials. Do not dispose of the packing materials until assembly is completed. Read all steps carefully before beginning. Use the PART IDENTIFICATION CHART below to identify the small hardware used in assembly. The number in parenthesis beneath each part refers to the key number of the part. The second number refers to the quantity used in assembly. Note: Some of the small hardware may have been pre-attached to one of the parts to be assembled. If a part is missing, see the back cover of this manual for instructions.

TOOLS REQUIRED FOR ASSEMBLY: The included tools, and your own hammer and adjustable wrench.

PART IDENTIFICATION CHART

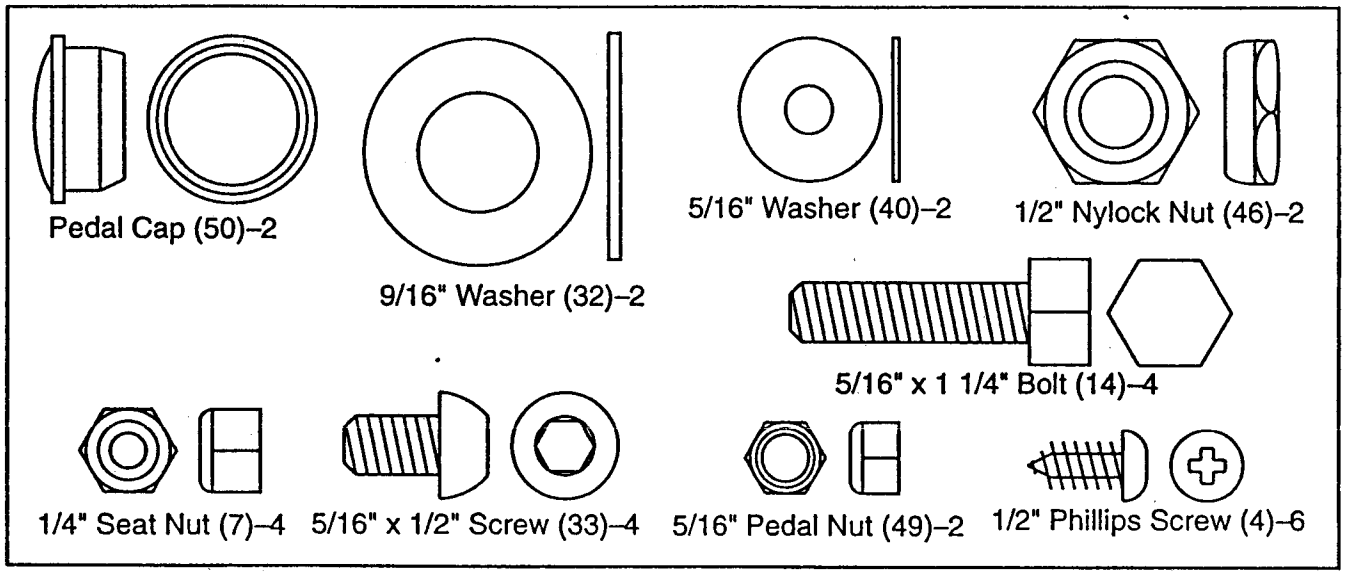

1. Raise the back of the exercise bike. Attach the Stabilizer (13) to the Frame (11) with the four 5/16" x 1 1/4" Bolts (14). The Stabilizer must be turned so the ribbed sides of the Flat Endcaps (12) are on the side shown. Lower the exercise bike.

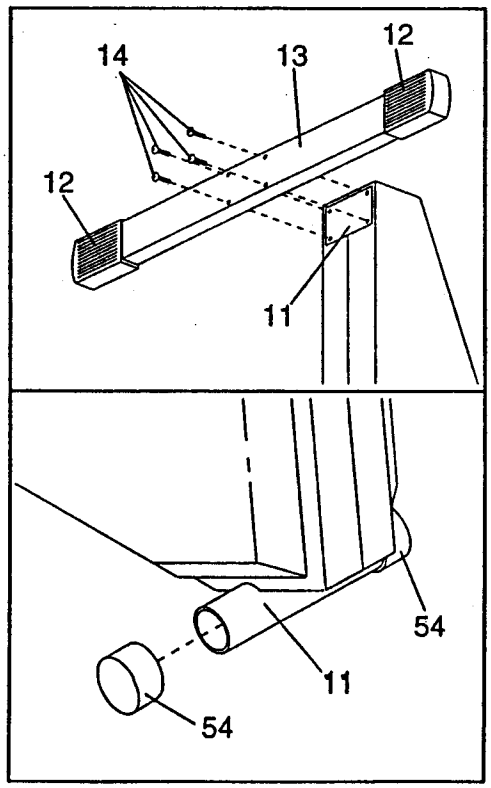

2. Press a Round Endcap (54) onto each end of the stabilizer on the front of the Frame (11).

3. Remove the four 1/4" Seat Nuts (7) from the underside of the Seat (5). Remove the Seat Post (6) from the Frame (11). Attach the Seat to the top of the Seat Post with the four 1/4" Seat Nuts.

   Insert the Seat Post (6) into the Frame (11), adjust the Seat (5) to the desired height, and insert the Seat Pin (8) through the front of the Frame and the Seat Post. Slide the Seat Post Collar (30) down over the top of the Frame. **CAUTION: At least two inches of the Seat Post must be inside of the Frame. The Seat Pin must be inserted from the front, as shown. If the Seat Pin is inserted from the back, it may slip out, resulting in injury.**

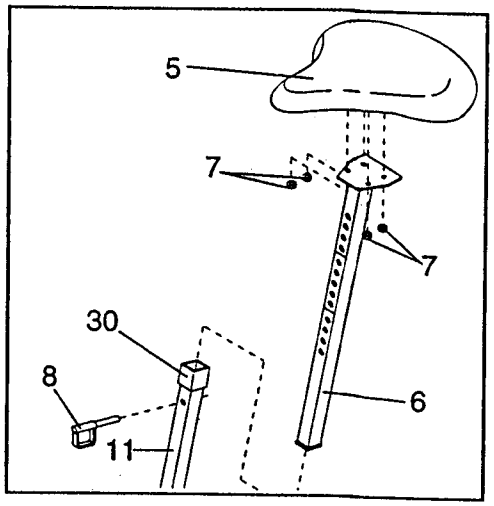

4. Attach the Right Handlebar (2) to the Left Handlebar (9) with two 1/2" Phillips Screws (4).

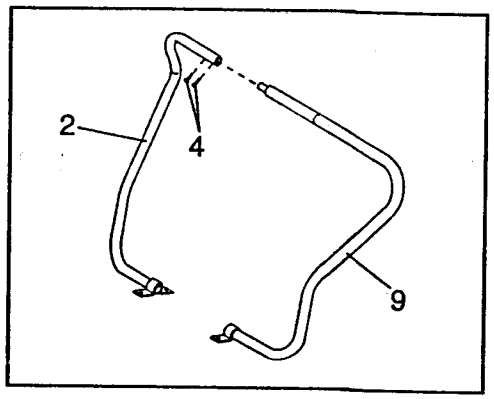

5. Attach the Right and Left Handlebars (2, 9) to the plate on the Frame (11) with the two Handlebar Brackets (53) and four 5/16" x 1/2" Screws (33) as shown.

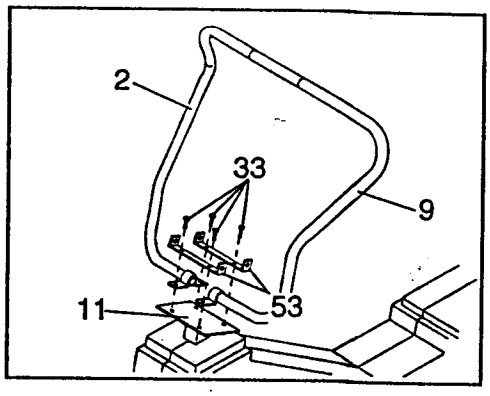

6. The Console (1) requires **two "AA" batteries** (not included); alkaline batteries are recommended. Slide open the battery cover on the front of the Console (see the upper inset drawing). Find the markings inside the battery clip showing which direction the batteries must be turned. Press the batteries into the battery clip. Close the battery cover.

   Attach the wire extending from the Console (1) to the Sensor Wire (31) (see the lower inset drawing). **Push the excess cable and wires down into the side shields.**

   Slide the Neck Shield (37) onto the Left and Right Side Shields (16, 34) as shown. **Be careful not to pinch the cable and wires extending from the Neck Shield.** Attach the Neck Shield to the Handlebar Brackets (53) with four 1/2" Phillips Screws (4).

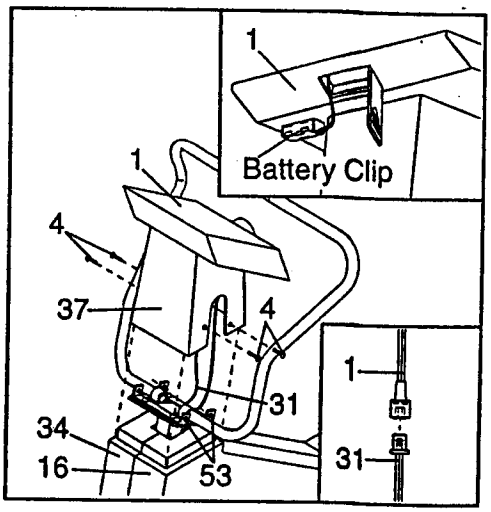

7. Hold one of the Pedal Shafts (38) with the included wrench tool, and use an adjustable wrench to remove the 1/2" Nylock Nut (46) from the Pedal Shaft. Using the included wrench tool, firmly tighten the Pedal Shaft clockwise into one arm of the Crank (27). Hold the Pedal Shaft with the included wrench tool, and use an adjustable wrench to tighten the 1/2" Nylock Nut (46) back onto the Pedal Shaft. (There is a 5/16" Washer [40] and 5/16" Pedal Nut [49] on the other end of the Pedal Shaft. The Pedal Nut must be flush with the end of the Pedal Shaft.) Press a Pedal Cap (50) into the end of the Pedal (10).

   Attach the other Pedal Shaft (not shown) in the same manner.

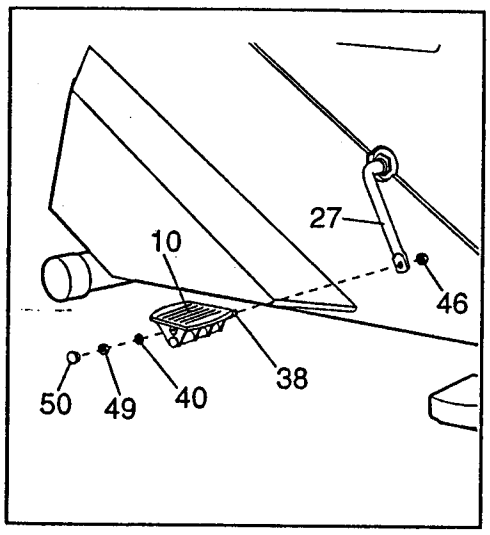

ADJUSTMENT AND OPERATION

SEAT ADJUSTMENT

For effective exercise, the Seat (5) should be adjusted to the proper height. As you pedal, there should be a slight bend in your knees when the pedals are at the lowest position. Dismount the exercise bike, hold the Seat and remove the Seat Pin (8). Adjust the Seat to the proper height and insert the Seat Pin through the Frame (11) and the Seat Post (6). **CAUTION: At least two inches of the Seat Post must be inside of the Frame. The Seat Pin must be inserted from the front, as shown. If the Seat Pin is inserted from the back, it may slip out during use, resulting in injury.**

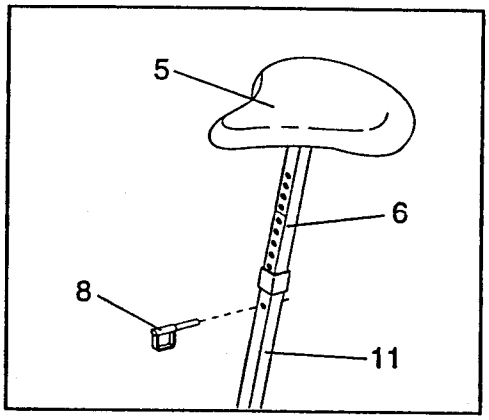

RESISTANCE ADJUSTMENT

To vary the intensity of your exercise, the pedaling resistance can be adjusted. The resistance is controlled by turning the Resistance Knob (48) on the Console (1). To increase the resistance, turn the Resistance Knob clockwise; to decrease the resistance, turn the Resistance Knob counterclockwise. IMPORTANT: Stop turning the Resistance Knob when turning becomes difficult, or the exercise bike may be damaged.

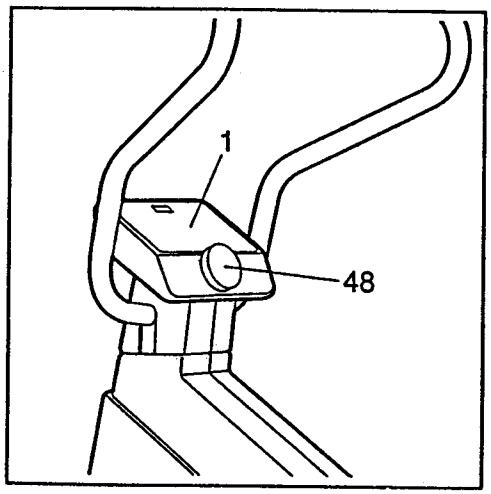

ELECTRONIC MONITOR MODES

SPEED—Displays your pedaling speed, in miles per hour.

TIME—Displays the elapsed time. Note: Time will be counted only while you are pedaling. If you stop for ten seconds or longer, the time will hold until you resume pedaling.

DISTANCE—Displays the total distance you have pedaled, in miles.

CALORIE—Displays the total number of Calories you have burned. Note: If the pedaling resistance is near the lowest or highest setting, the actual number of Calories you have burned will be slightly lower or higher than the number displayed.

SCAN—Displays the SPEED, TIME, DISTANCE and CALORIE modes in a repeating cycle.

ELECTRONIC MONITOR DIAGRAM

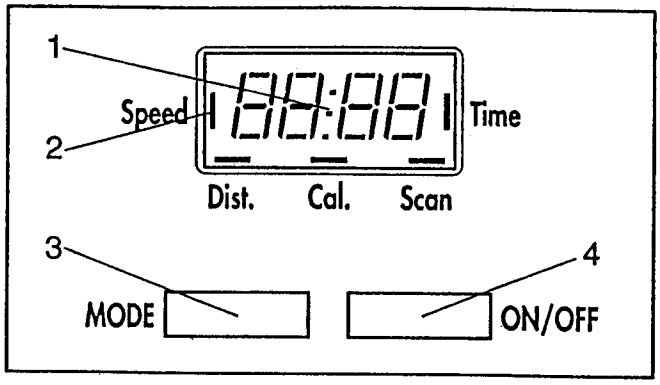

1. LCD display—Display for all modes.
2. Mode indicator—Shows which mode is currently selected.
3. Mode button—Selects modes.
4. On/off button—Turns the power on and off, and resets the display.

ELECTRONIC MONITOR OPERATION

Note: The electronic monitor requires two "AA" size batteries (not included). See assembly step 6 on page 5 for battery installation instructions.

1. To turn on the power, press the on/off button or simply begin pedaling.
2. Select one of the five modes:

   A. SCAN—When the power is turned on, the SCAN mode will be selected automatically. A mode indicator will appear by the word "SCAN." The SPEED, TIME, DISTANCE and CALORIE modes will all be displayed, for five seconds each, in a repeating cycle. A second mode indicator will show which mode is currently displayed.

   B. SPEED, TIME, DISTANCE or CALORIE—The SPEED, TIME, DISTANCE or CALORIE mode can be selected for continuous display by repeatedly pressing the mode button. The modes will be selected in the following order: SPEED, TIME, DISTANCE, CALORIE, SCAN.

3. To reset the LCD display, turn the power off and then on again by pressing the on/off button twice.
4. When you are finished exercising, press the on/off button to turn off the power. Note: If the pedals are not turned and the electronic monitor buttons are not pressed for four minutes, the power will turn off automatically to conserve the batteries.

ELECTRONIC MONITOR CARE

Keep the electronic monitor out of direct sunlight, or the LCD display may be damaged. Clean the monitor periodically using a soft, dry cloth. Do not allow liquids to come in contact with the monitor.

TROUBLE-SHOOTING AND MAINTENANCE

Inspect and tighten all parts regularly. Outer surfaces of the exercise bike can be cleaned using a damp cloth and mild, non-abrasive detergent. Keep liquids away from the console.

ELECTRONIC MONITOR

If the LCD display becomes faint, or if the electronic monitor does not function properly, the batteries should be replaced. See assembly step 6 on page 5 for battery installation instructions. If the monitor still does not function properly, the sensor wire should be checked. See assembly step 6 on page 5 to see how the sensor wire should be connected.

ADJUSTING THE TENSION BELT

If the tension belt slips as you pedal, the tension belt should be tightened. Remove the Pedals (10) (see assembly step 7 on page 6). Remove the four 1/2" Phillips Screws (4) from the Neck Shield (37). Remove the #8 x 1" Screws (15) and the 3/4" Tec Screws (36) from the Left and Right Side Shields (16, 34). Slide the Side Shields off the exercise bike. To tighten the tension belt, turn both of the 3/8" Flange Nuts (18) clockwise one full turn. Repeat until the tension belt no longer slips. Reattach the Side Shields, Neck Shield and Pedals.

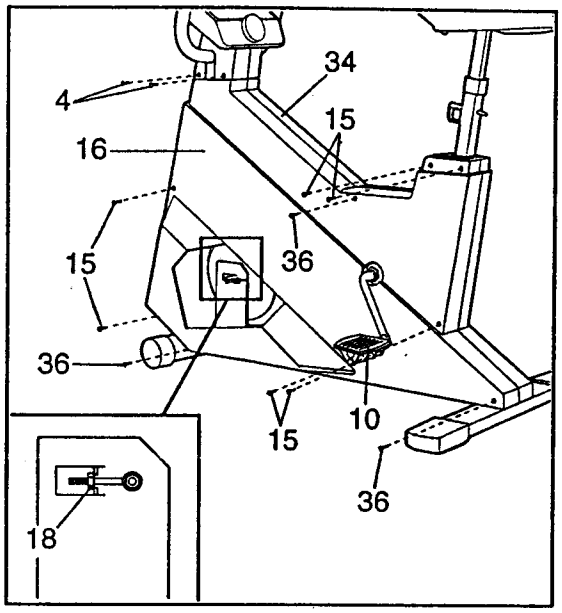

CENTERING THE TENSION BRACKET

If a grinding noise is heard as you pedal, the Tension Bracket (35) should be adjusted. Remove the pedals, side shields, and neck shield (see ADJUSTING THE TENSION BELT above). Hold the 3/8" x 16 Nylock Nut (17) with a wrench. If the Tension Bracket is touching the right side of the Resistance Disk (22), turn the Tension Bracket Bolt (52) clockwise until the Tension Bracket is centered. If the Tension Bracket is touching the left side of the Resistance Disk, turn the Bolt counterclockwise. Reattach the side shields, neck shield and pedals.

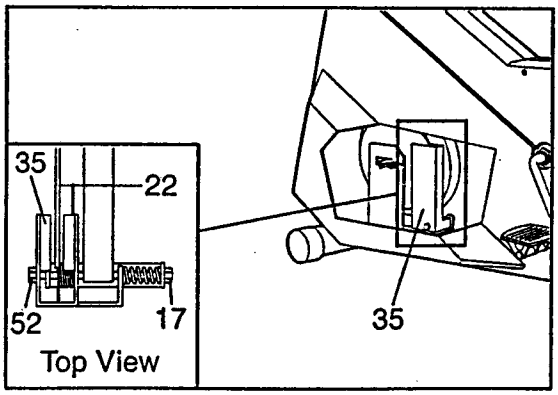

TIGHTENING THE CRANK ARMS

If the crank arms become loose, they should be tightened in order to prevent excessive wear. Loosen the hex nut on the left arm of the Crank (27). Place the end of a standard screwdriver in one of the grooves in the crank nut. Lightly tap the screwdriver with a hammer to turn the crank nut counterclockwise, until the crank arms are no longer loose. **Do not overtighten the crank nut.** When the crank nut is properly tightened, tighten the hex nut.

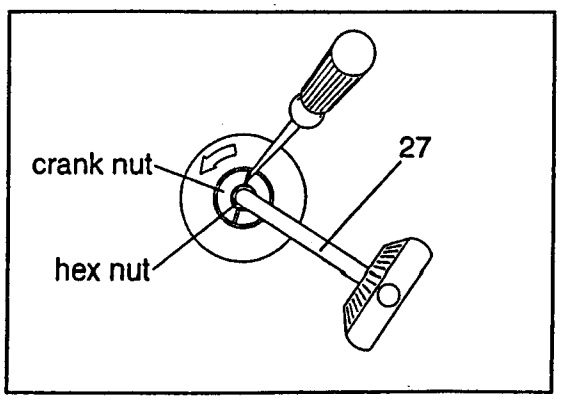

CONDITIONING GUIDELINES

The following guidelines will help you to plan your exercise program. Remember that proper nutrition and adequate rest are essential for successful results. **WARNING: Before beginning this or any exercise program, consult your physician. This is especially important for persons over the age of 35 or persons with pre-existing health problems.**

EXERCISE INTENSITY

To maximize the benefits of exercising, it is important to exercise with the proper intensity. The proper intensity level can be found by using your heart rate as a guide. For effective aerobic exercise, your heart rate should be maintained at a level between 70% and 85% of your maximum heart rate as you exercise. This is known as your training zone. You can find your training zone in the table below. Training zones are listed for both unconditioned and conditioned persons according to age.

AGE	UNCONDITIONED TRAINING ZONE (BEATS/MIN)	CONDITIONED TRAINING ZONE (BEATS/MIN)
20	138-167	133-162
25	136-166	132-160
30	135-164	130-158
35	134-162	129-156
40	132-161	127-155
45	131-159	125-153
50	129-156	124-150

AGE	UNCONDITIONED TRAINING ZONE (BEATS/MIN)	CONDITIONED TRAINING ZONE (BEATS/MIN)
55	127-155	122-149
60	126-153	121-147
65	125-151	119-145
70	123-150	118-144
75	122-147	117-142
80	120-146	115-140
85	118-144	114-139

During the first few months of your exercise program, keep your heart rate near the low end of your training zone as you exercise. After a few months, your heart rate can be increased gradually until it is near the middle of your training zone as you exercise. To measure your heart rate, stop exercising and place two fingers on your wrist. Take a six-second heartbeat count, and multiply the result by 10 to find your heart rate. For example, if your six-second heartbeat count is 14, your heart rate is 140 beats per minute. (A six-second count is used because your heart rate will drop rapidly when you stop exercising.) Adjust the intensity of your exercise until your heart rate is at the proper level.

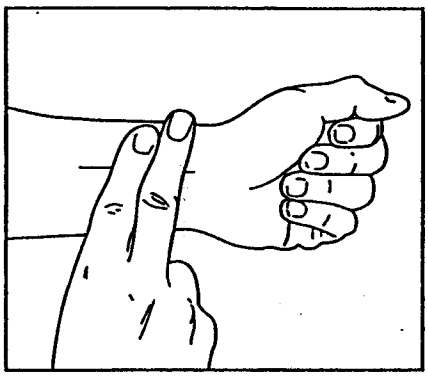

WORKOUT GUIDELINES

Each workout should consist of three basic parts: a warm-up, 20 to 30 minutes of training zone exercise, and a cool-down. Warming up prepares the body for exercise by increasing circulation, delivering more oxygen to the muscles and raising the body temperature. Begin each workout with 5 to 10 minutes of stretching and light exercise to warm up. Then, increase the intensity of your exercise to raise your heart rate to your training zone for 20 to 30 minutes. Breathe regularly and deeply as you exercise—never hold your breath. Finish each workout with 5 to 10 minutes of stretching to cool down. This will increase the flexibility of the muscles, as well as reduce soreness and other post-exercise problems. To maintain or improve your condition, complete three workouts each week, with at least one day of rest between workouts. After a few months of regular exercise, you may complete up to five workouts each week, if desired. The key to success is CONSISTENCY.

PART LIST—Model No. WLEX67540

R1194A

Key No.	Qty.	Description
1	1	Console
2	1	Right Handlebar
3	2	5/16" Flat Washer
4	6	1/2" Phillips Screw
5	1	Seat
6	1	Seat Post
7	4	1/4" Seat Nut
8	1	Seat Pin
9	1	Left Handlebar
10	2	Pedal
11	1	Frame
12	2	Flat Endcap
13	1	Stabilizer
14	4	5/16" x 1 1/4" Bolt
15	12	#8 x 1" Screw
16	1	Left Side Shield
17	1	3/8" x 16 Nylock Nut
18	1	3/8" Flange Nut
19	1	Small Spacer
20	2	Bearing
21	1	Large Spacer
22	1	Resistance Disk
23	1	Flywheel Axle
24	1	3/4" Self-Tapping Screw
25	1	Flywheel
26	1	Lock Ring
27	1	Crank
28	1	Tension Belt
29	1	Tension Pulley
30	1	Seat Post Collar
31	1	Reed Switch/Sensor Wire
32	2	Round Endcap
33	6	5/16" x 1/2" Screw
34	1	Right Side Shield
35	1	Tension Bracket
36	6	3/4" Tec Screw
37	1	Neck Shield
38	2	Pedal Shaft
39	1	Small Spring
40	2	5/16" Washer
41	1	Large Spring
42	1	Eye Bolt
43	2	5/16" Flange Nut
44	1	#8 x 1/2" Screw
45	1	Seat Post Glide
46	2	1/2" Nylock Nut
47	1	Crank Hardware
48	1	Resistance Knob/Cable
49	2	5/16" Pedal Nut
50	2	Pedal Cap
51	1	Magnet
52	1	Tension Bracket Bolt
53	2	Handlebar Bracket
#	1	Screwdriver/Wrench
#	1	Socket Tool
#	1	Allen Wrench
#	4	M-Clip
#	1	Owner's Manual

Note: "#" indicates a non-illustrated part. Specifications are subject to change without notice. See the back cover of this manual for information about ordering replacement parts.

EXPLODED DRAWING—Model No. WLEX67540

R1194A

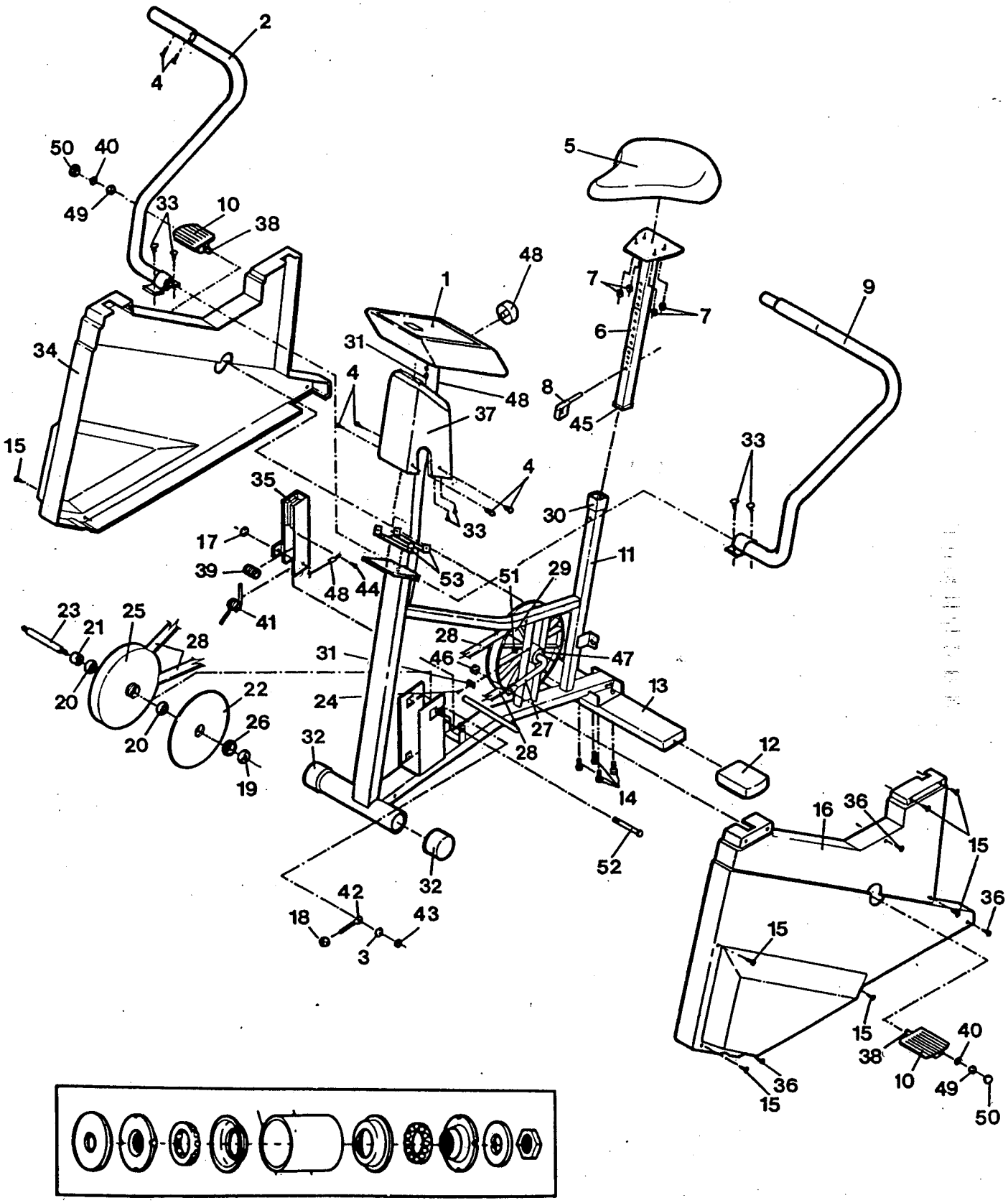

CRANK HARDWARE (47)

© 1994 Weslo, Inc., a Subsidiary of Weider Health and Fitness, Inc.

7. Hold one of the Pedal Shafts (29) ...

ORDERING REPLACEMENT PARTS

To order replacement parts, simply call our Customer Service Department toll-free at 1-800-999-3756, Monday through Friday, 6 a.m. until 6 p.m. Mountain Time (excluding holidays). To help us assist you, please be prepared to give the following information when calling:

1. The MODEL NUMBER of the product (WLEX67540).

2. The NAME of the product (WESLO® PURSUIT 675 exercise bike).

3. The SERIAL NUMBER of the product (see the front cover of this manual).

4. The KEY NUMBER and DESCRIPTION of the part(s) from page 10 of this manual.

LIMITED WARRANTY

Weslo, Inc. ("WESLO"), warrants this product to be free from defects in workmanship and material, under normal use and service conditions, for a period of ninety (90) days from the date of purchase. This warranty extends only to the original purchaser. WESLO's obligation under this warranty is limited to replacing or repairing, at WESLO's option, the product at one of its authorized service centers. All products for which warranty claim is made must be received by WESLO at one of its authorized service centers with all freight and other transportation charges prepaid, accompanied by sufficient proof of purchase. All returns must be pre-authorized by WESLO. This warranty does not extend to any product or damage to a product caused by or attributable to freight damage, abuse, misuse, improper or abnormal usage or repairs not provided by a WESLO authorized service center or for products used for commercial or rental purposes. No other warranty beyond that specifically set forth above is authorized by WESLO.

WESLO IS NOT RESPONSIBLE OR LIABLE FOR INDIRECT, SPECIAL OR CONSEQUENTIAL DAMAGES ARISING OUT OF OR IN CONNECTION WITH THE USE OR PERFORMANCE OF THE PRODUCT OR OTHER DAMAGES WITH RESPECT TO ANY ECONOMIC LOSS, LOSS OF PROPERTY, LOSS OF REVENUES OR PROFITS, LOSS OF ENJOYMENT OR USE, COSTS OF REMOVAL, INSTALLATION OR OTHER CONSEQUENTIAL DAMAGES OF WHATSOEVER NATURE. SOME STATES DO NOT ALLOW THE EXCLUSION OR LIMITATION OF INCIDENTAL OR CONSEQUENTIAL DAMAGES. ACCORDINGLY, THE ABOVE LIMITATION MAY NOT APPLY TO YOU.

THE WARRANTY EXTENDED HEREUNDER IS IN LIEU OF ANY AND ALL OTHER WARRANTIES AND ANY IMPLIED WARRANTIES OF MERCHANTABILITY OR FITNESS FOR A PARTICULAR PURPOSE IS LIMITED IN ITS SCOPE AND DURATION TO THE TERMS SET FORTH HEREIN. SOME STATES DO NOT ALLOW LIMITATIONS ON HOW LONG AN IMPLIED WARRANTY LASTS. ACCORDINGLY, THE ABOVE LIMITATION MAY NOT APPLY TO YOU.

This warranty gives you specific legal rights. You may also have other rights which vary from state to state.

WESLO INC., 1500 S. 1000 W., LOGAN, UT 84321-9813

Part No.119889 R1194A

Printed in USA