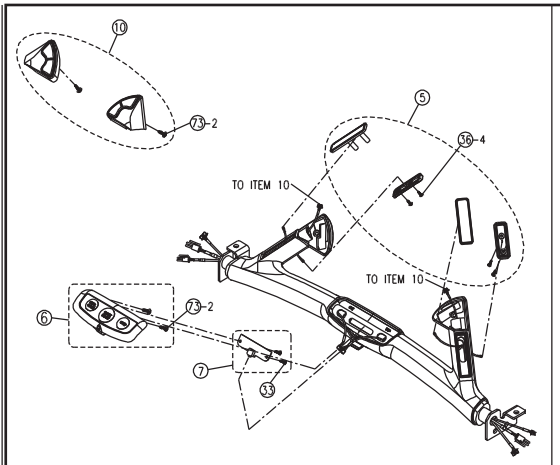

DETAIL VIEW OF CROSSBAR

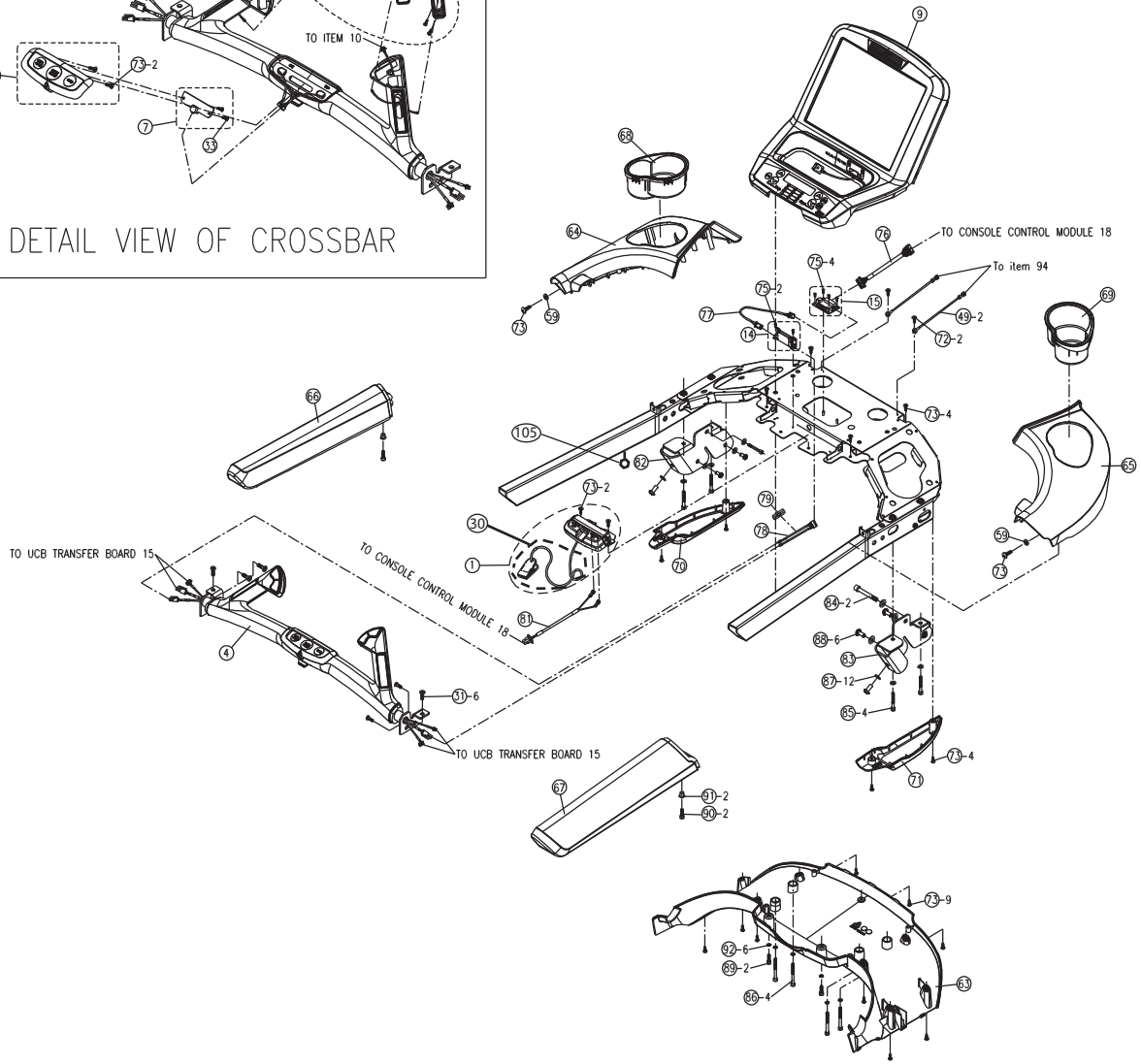

SERVICE DRAWING OF T7xe CONSOLE

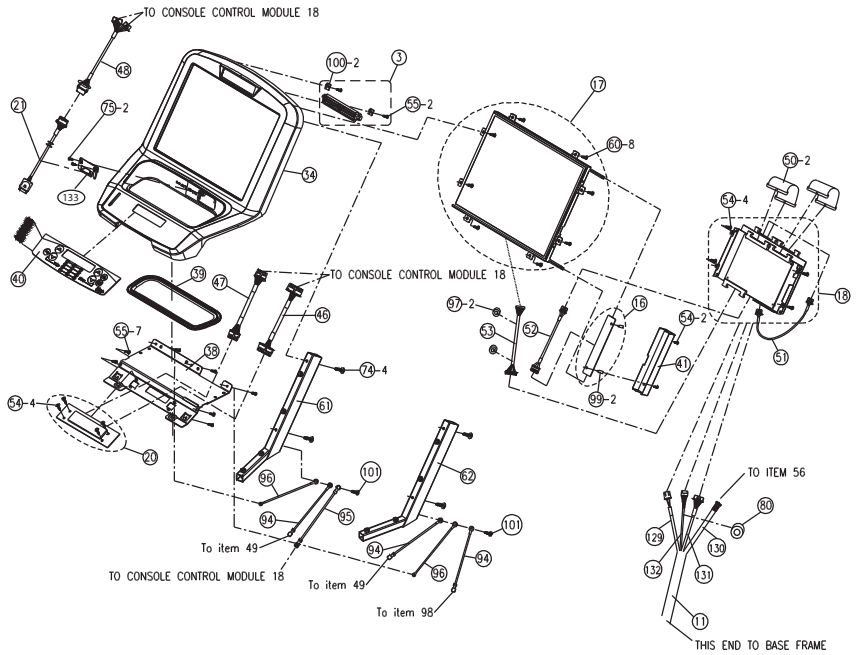

DETAIL VIEW OF FACE PLATE

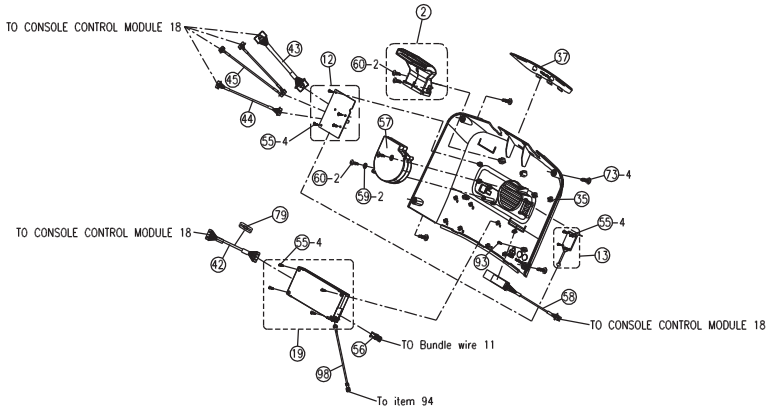

DETAIL VIEW OF BACK COVER