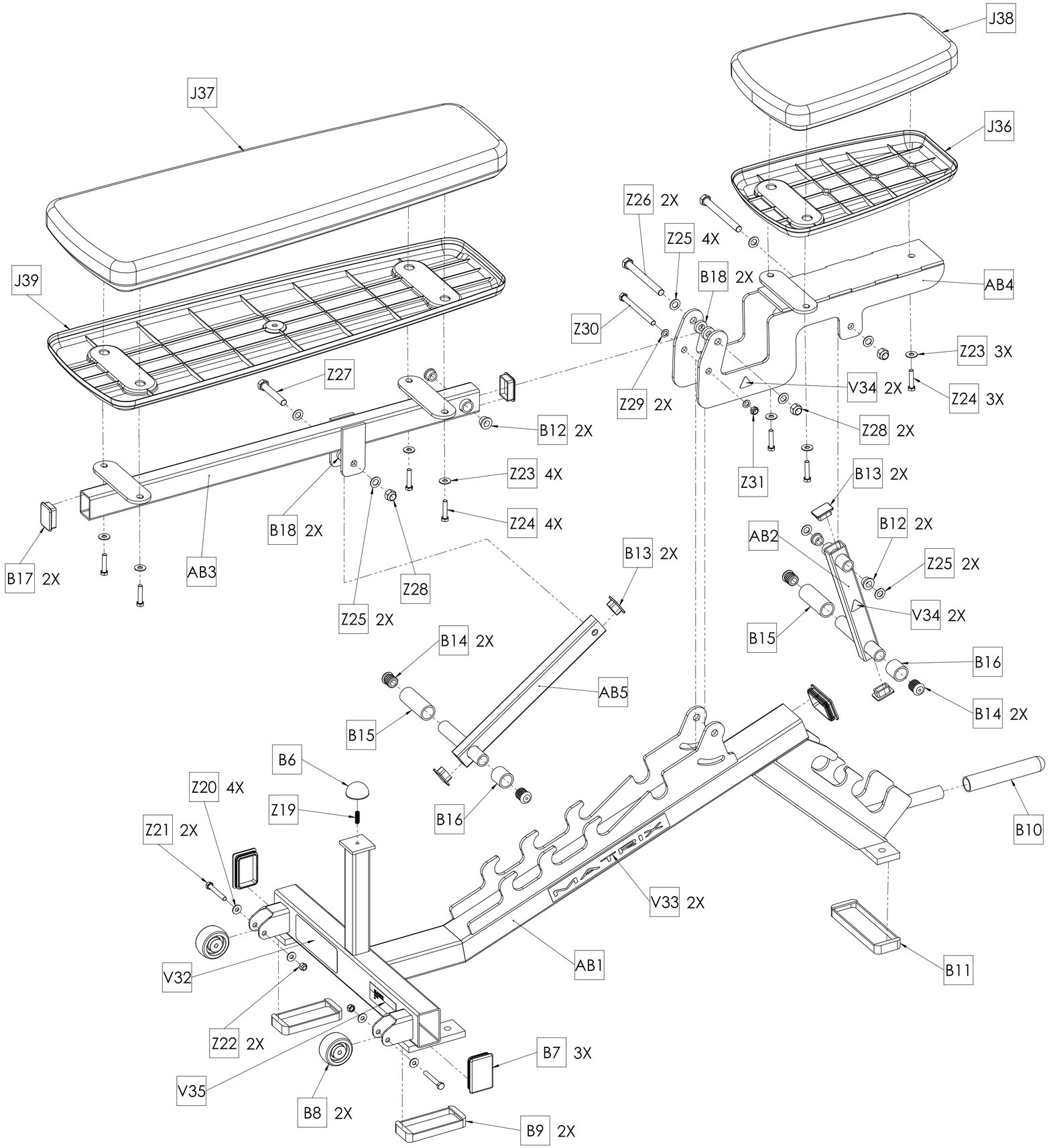

MATRIX

DWG NO.	VY-D85A-04 SERVICE		
DESCRIPTION:	MULTI-ADJUSTABLE BENCH (Free Weights)		
DRAWN BY:	LG	DATE:	2020.JAN.17
UPDATED BY:		DATE:	