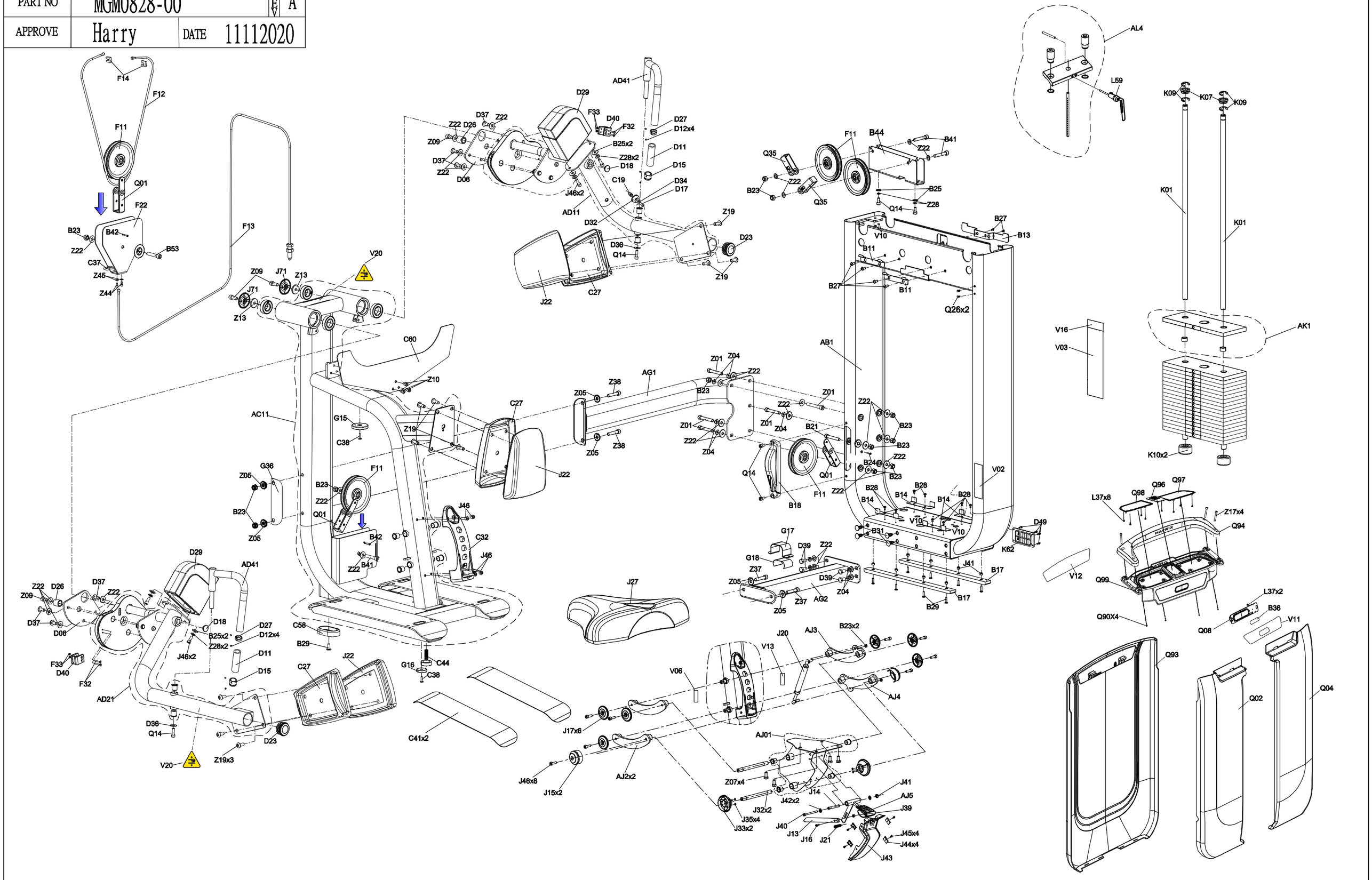DRAWING NO	PG7GM229H-KM		
PART NAME	Explosive Diagram		
PART NO	MGM0828-00	REV	A
APPROVE	Harry	DATE	11112020