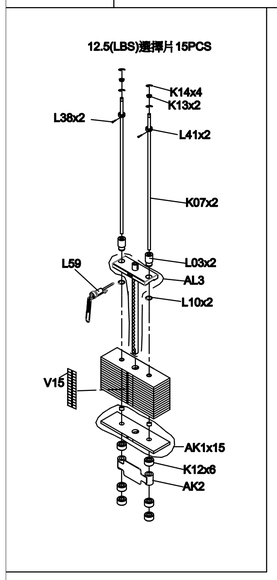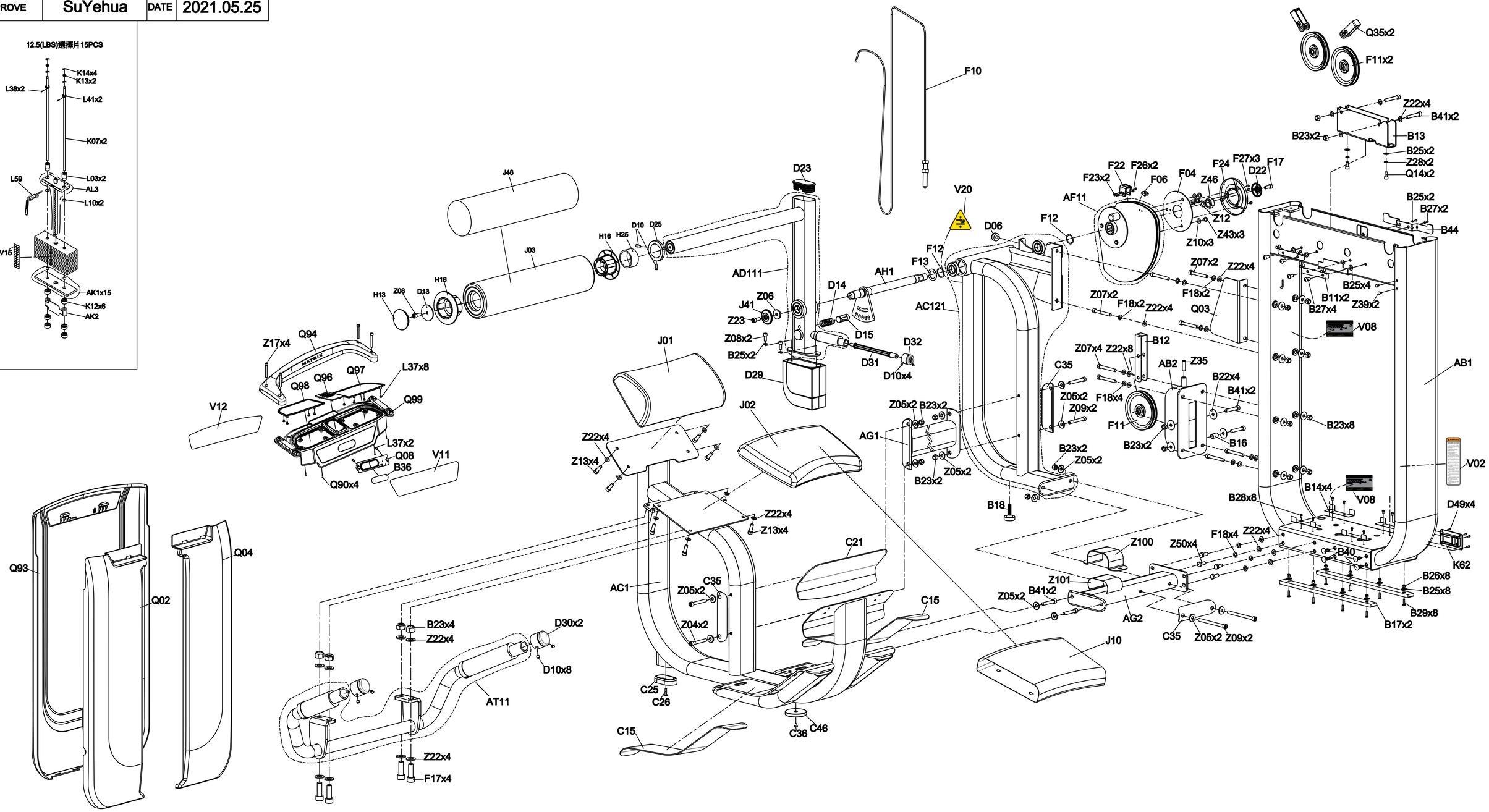DRAWING NO	PG7GM226-KM		
PART NAME	Explosive Diagram		
PART NO	MGM0798-00	REV	A
APPROVE	SuYehua	DATE	2021.05.25