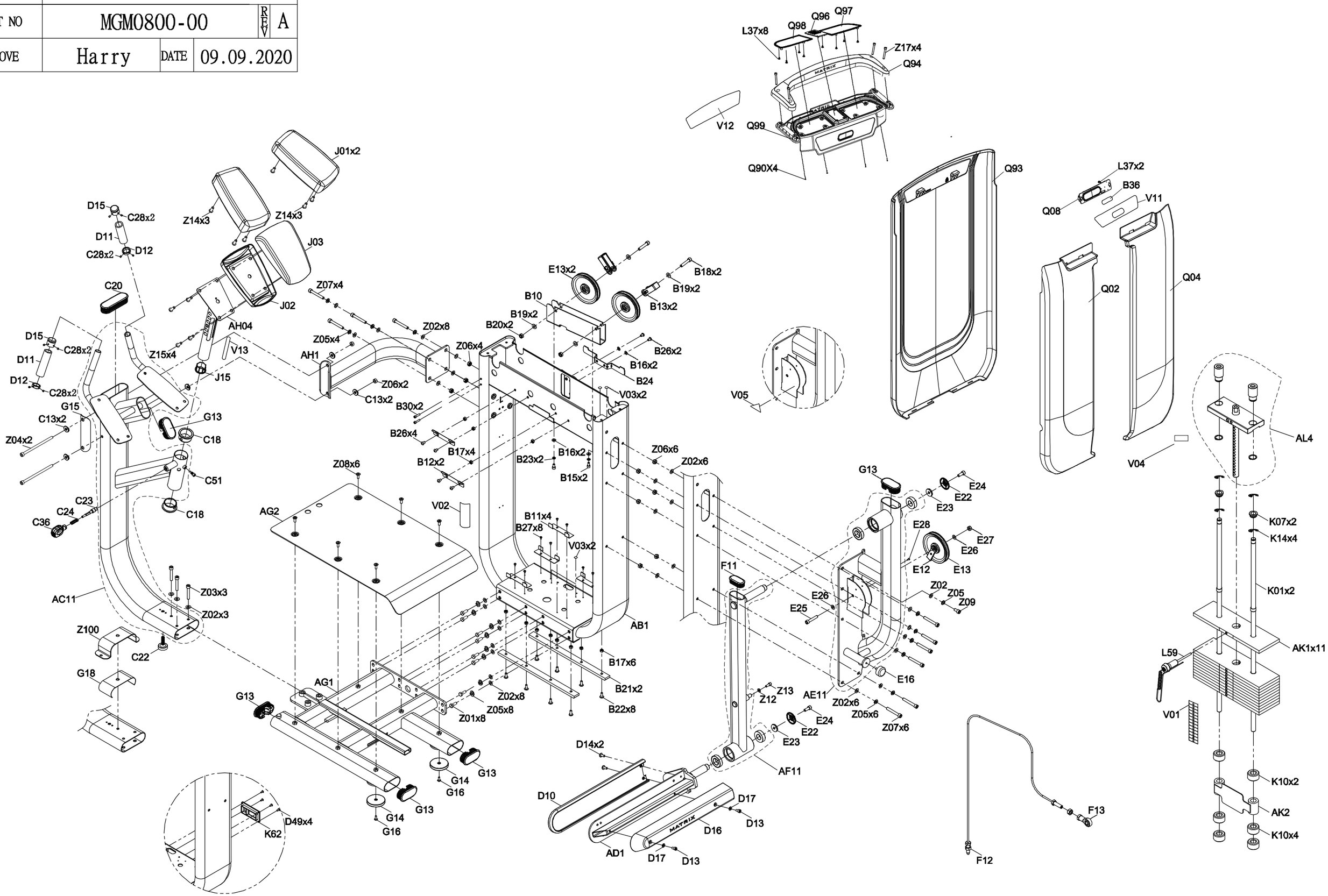DRAWING NO	PG7GM228-KM		
PART NAME	Glute		
PART NO	MGM0800-00	REV	A
APPROVE	Harry	DATE	09.09.2020