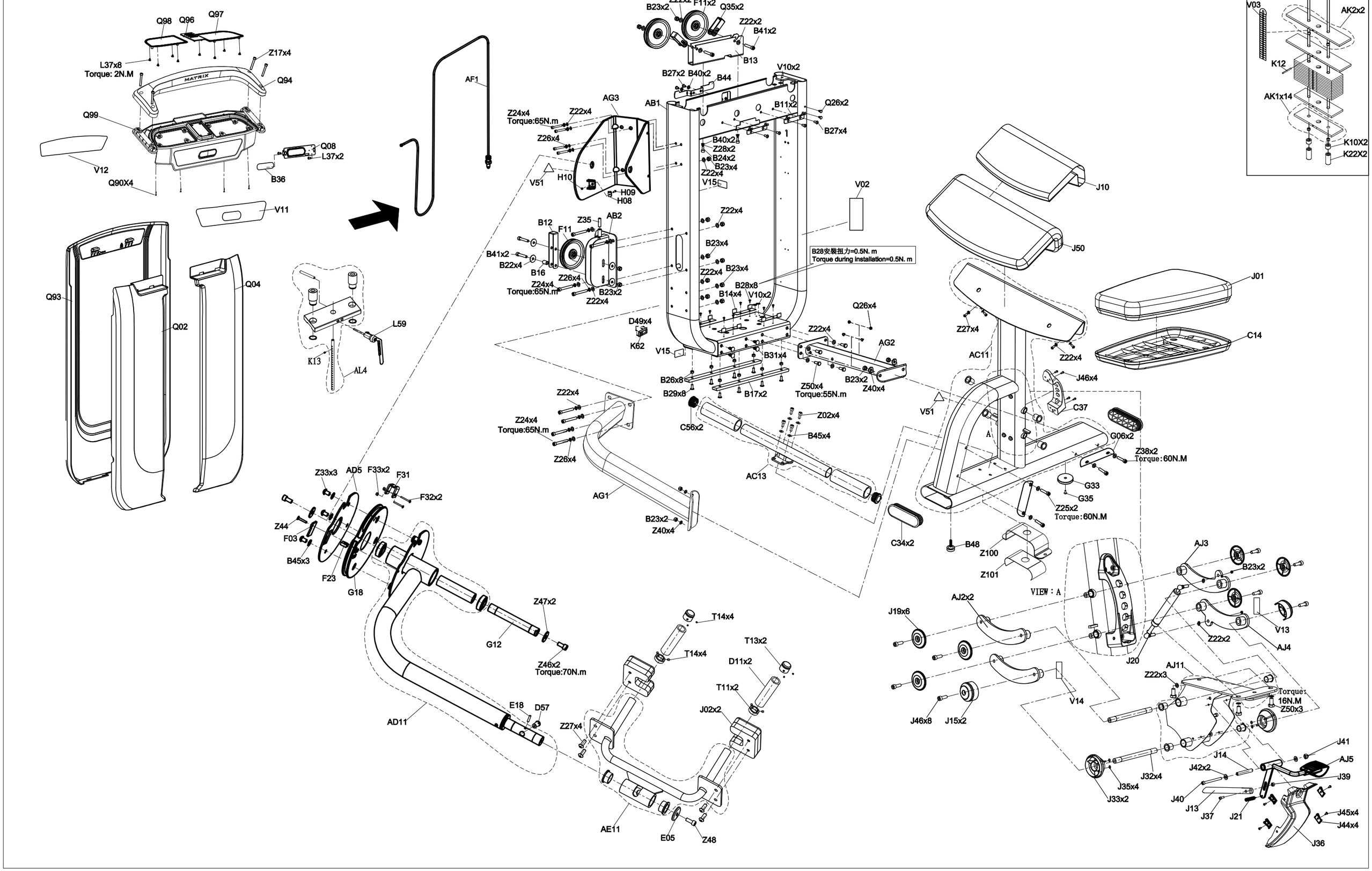DRAWING NO	PG7GM233-KM		
PART NAME	Explosive Drawing		
PART NO	MGM0835-00	REV	A
APPROVE	Wang Wenzhi	DATE	2021.07.05