DRAWING NO	EP631-A04
PART NAME	EXPLODED DRAWING
PART NO	1000433232 REV K
APPROVE	RAINSTOP DATE 062623

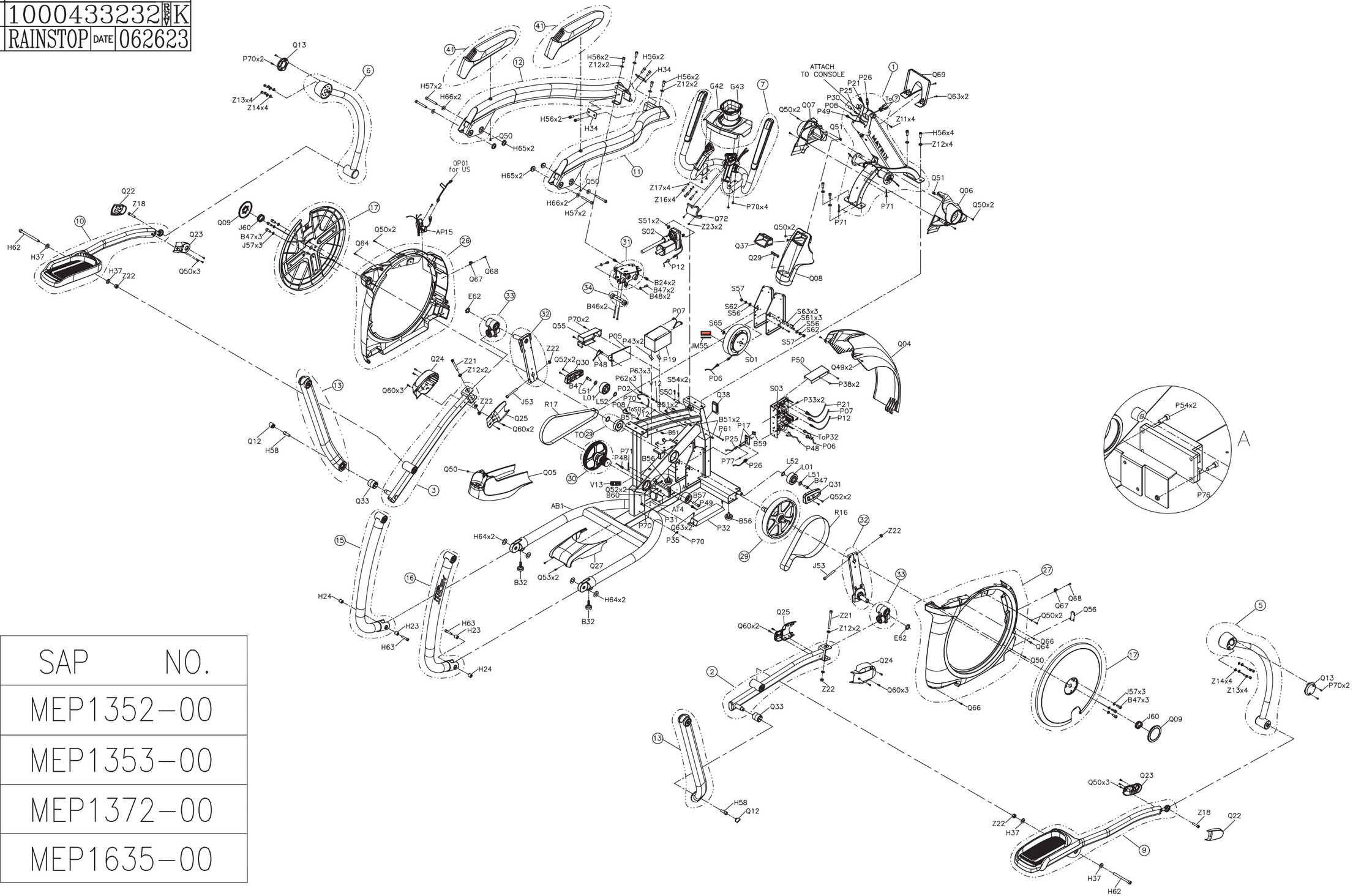

SAP NO.
MEP1352-00
MEP1353-00
MEP1372-00
MEP1635-00

DRAWING NO	EP78-AR11		
PART NAME	PULLEY SET		
PART NO	0000089635	REV	B
APPROVE	tsaijw	DATE	112910

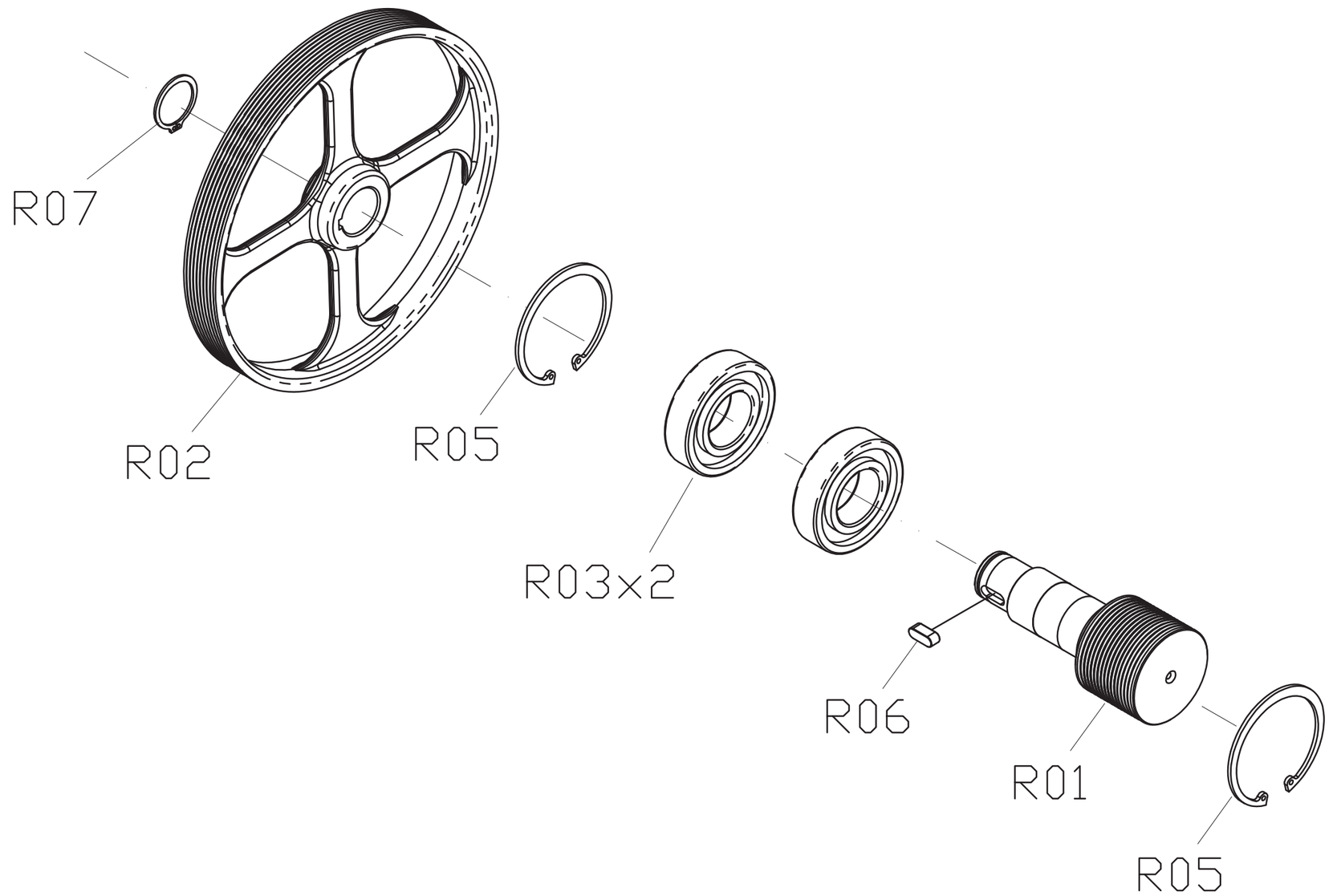

DRAWING NO	EP306-AB5		
PART NAME	MOTOR CARRIAGE SET		
PART NO	0000094930	REV	B
APPROVE	MAX	DATE	20110628

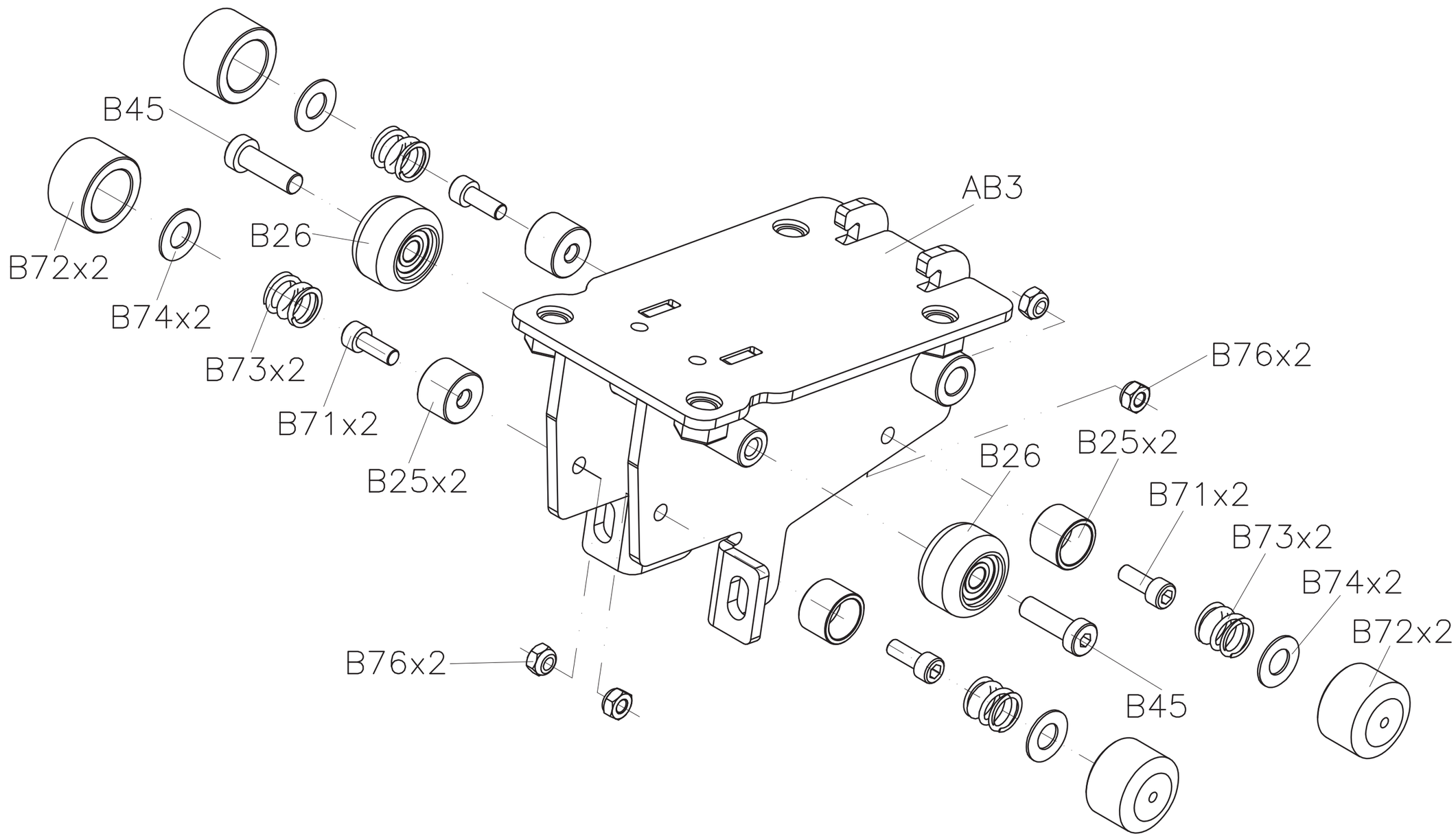

DRAWING NO	EP308-AH24		
PART NAME	LEFT CONNECTION ARM SET		
PART NO	See Attached	REV	E
APPROVE	tsaijw	DATE	20200710

SAP No.	Description
0000095060	SLIVER
1000348929	BLACK MATTE(Fitness park)
1000349021	BLACK MATTE(Groupe moving)

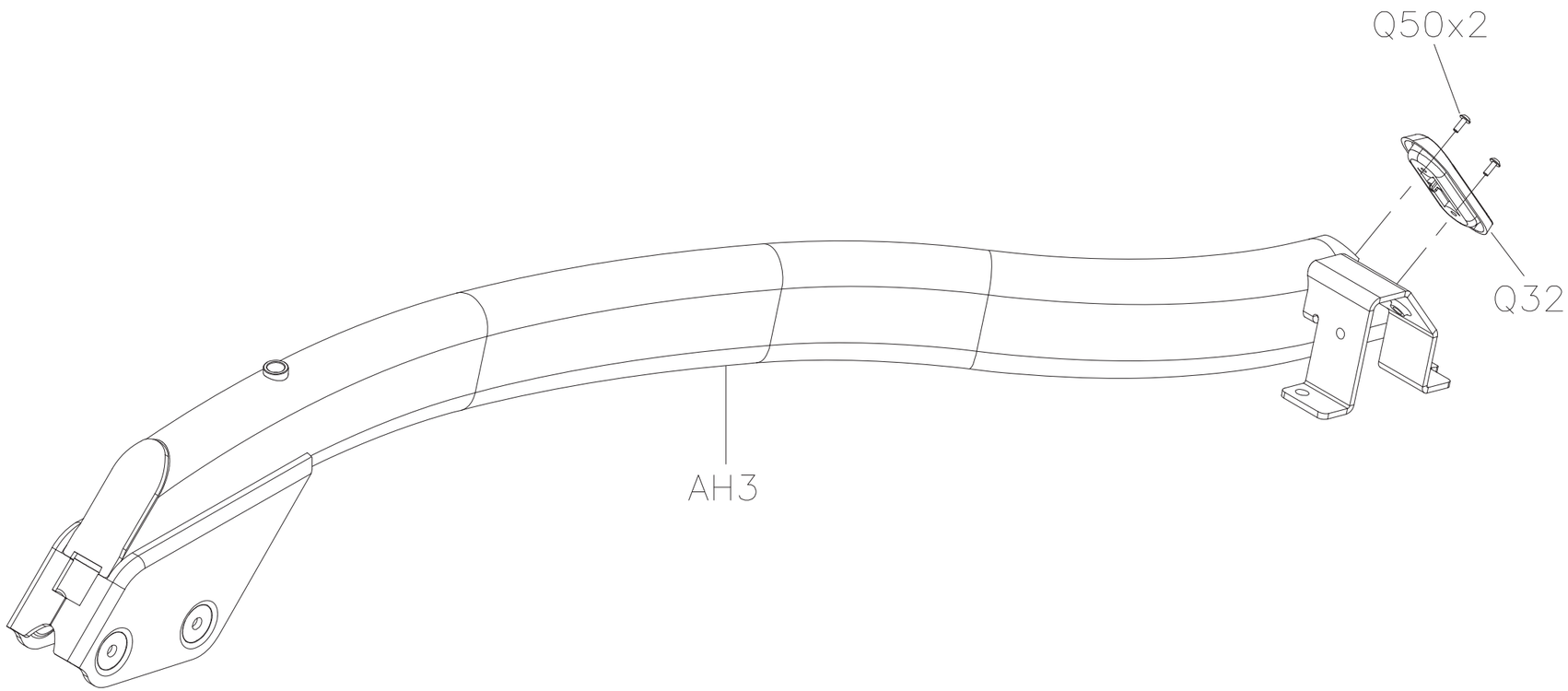

DRAWING NO	EP304-AQ11		
PART NAME	LEFT SIDE COVER SET		
PART NO	0000095068	REV	A
APPROVE	tsaijw	DATE	20101213

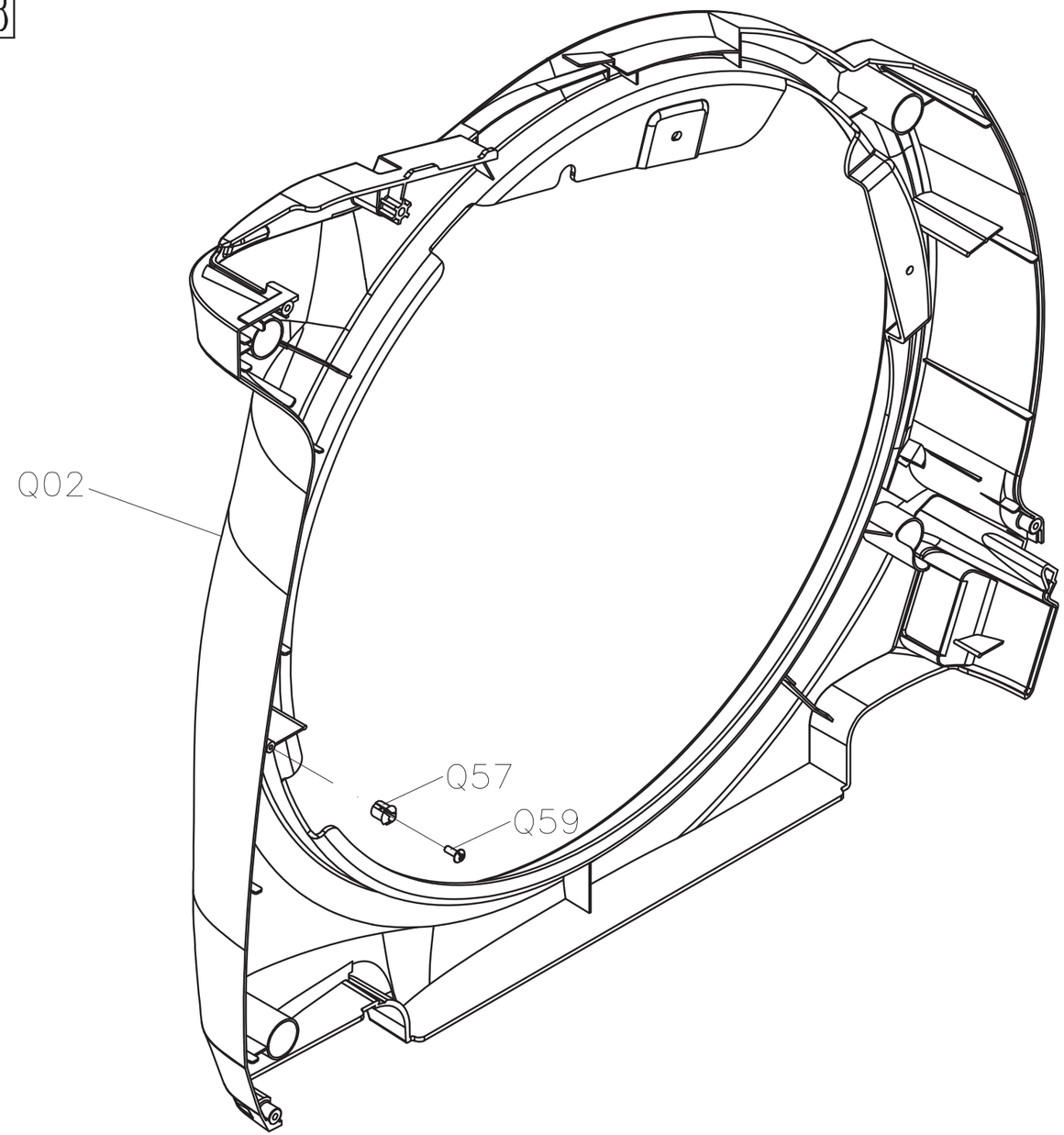

DRAWING NO	EP304-AQ12		
PART NAME	RIGHT SIDE COVER SET		
PART NO	0000095071	REV	A
APPROVE	tsaijw	DATE	20101213

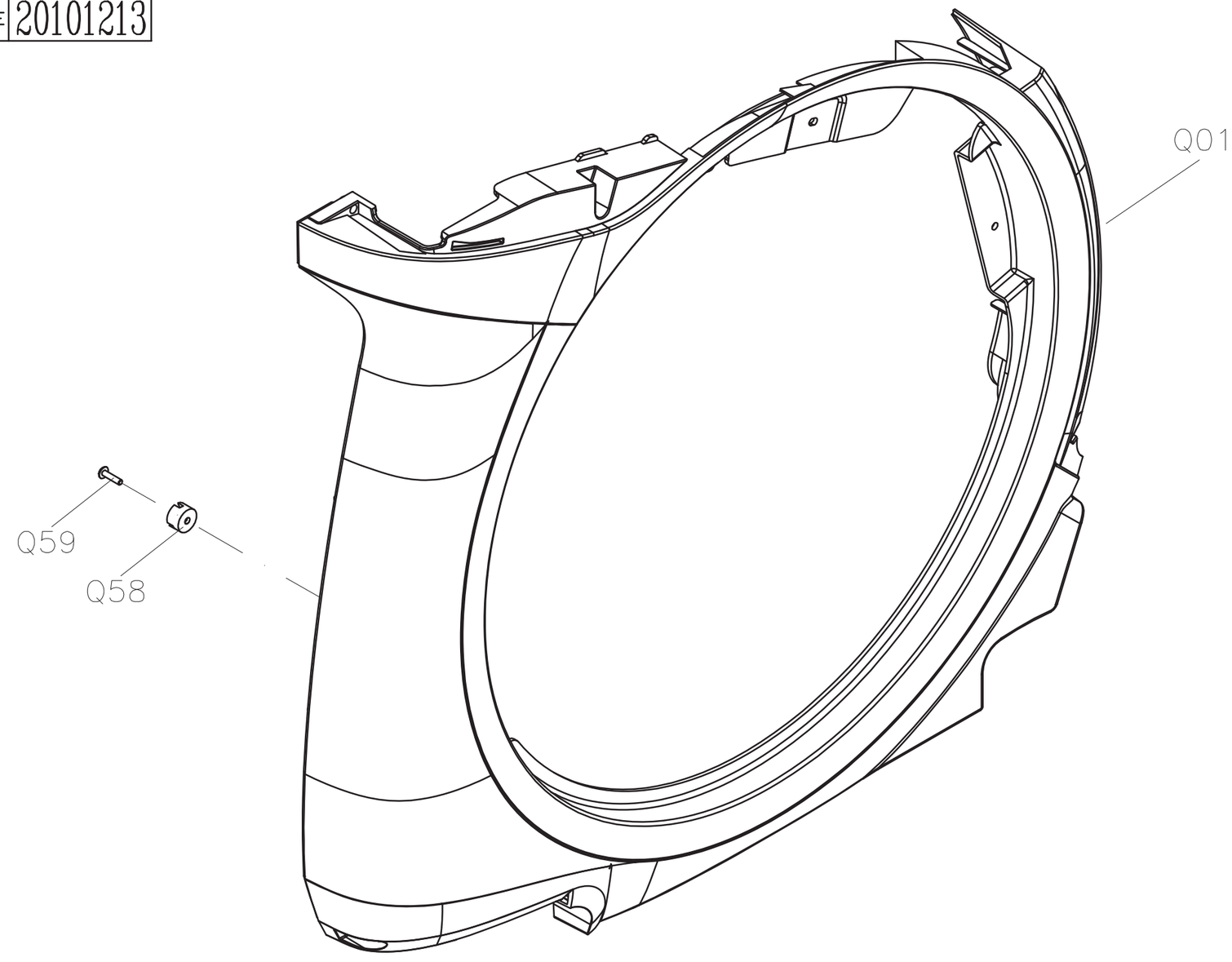

DRAWING NO	EP304-AJ12		
PART NAME	CRANK SET		
PART NO	0000095121	REV	B
APPROVE	Tsaijw	DATE	20110909

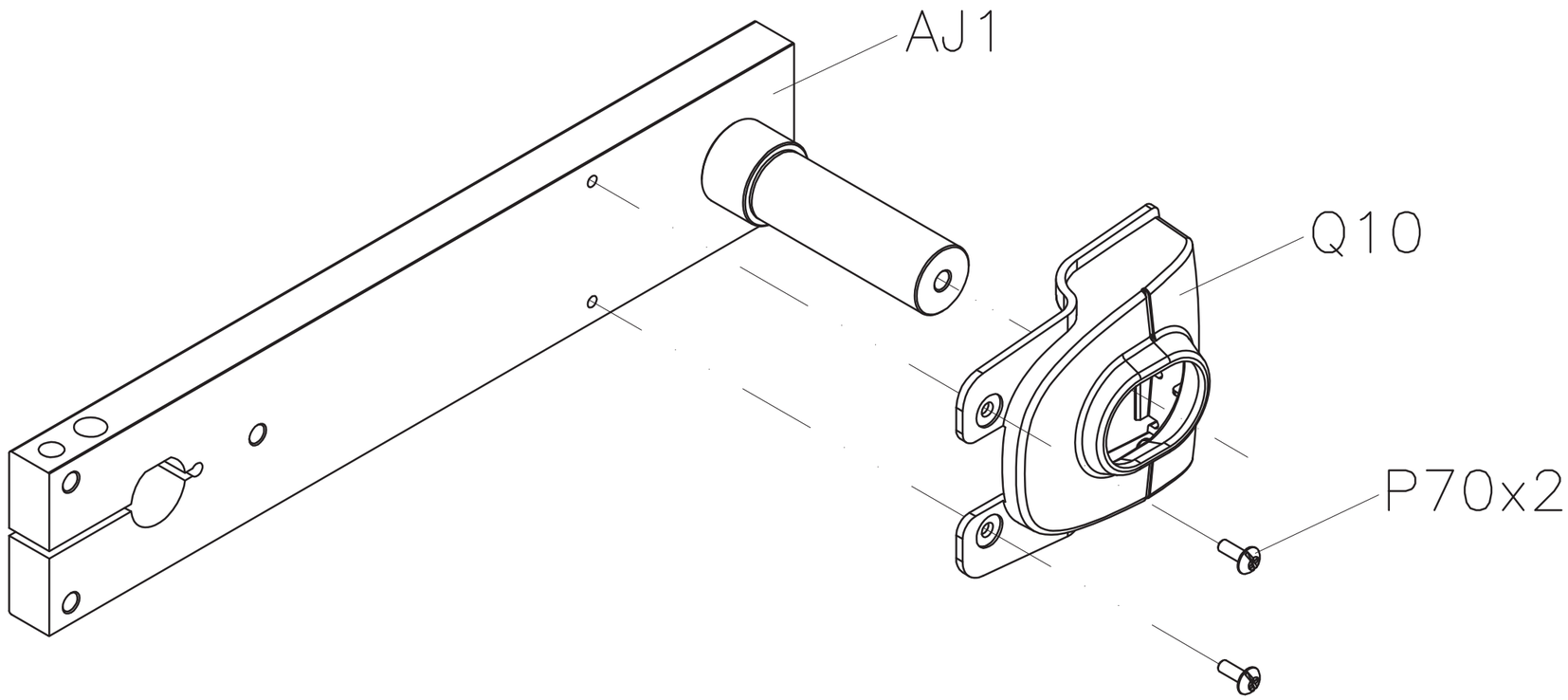

DRAWING NO	EP308-AQ21		
PART NAME	Incline arm cover		
PART NO	0000095212	REV	A
APPROVE	MAX	DATE	20101210

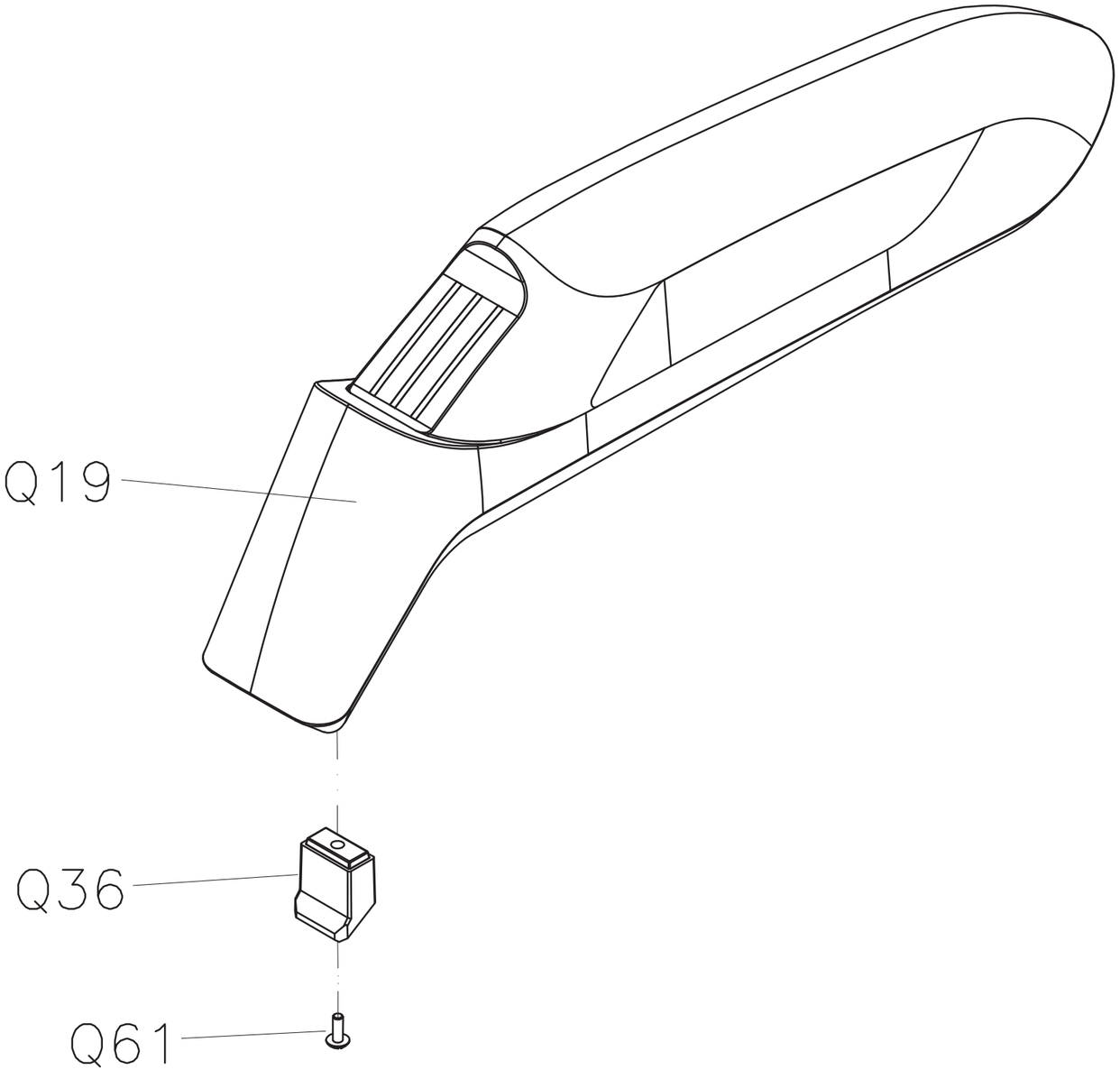

DRAWING NO	EP308-AH23		
PART NAME	RIGHT CONNECTION ARM SET		
PART NO	See attached	REV	E
APPROVE	tsaijw	DATE	20200710

SAP No.	Description
0000095217	SLIVER
1000348928	BLACK MATTE(Fitness park)
1000349020	BLACK MATTE(Groupe moving)

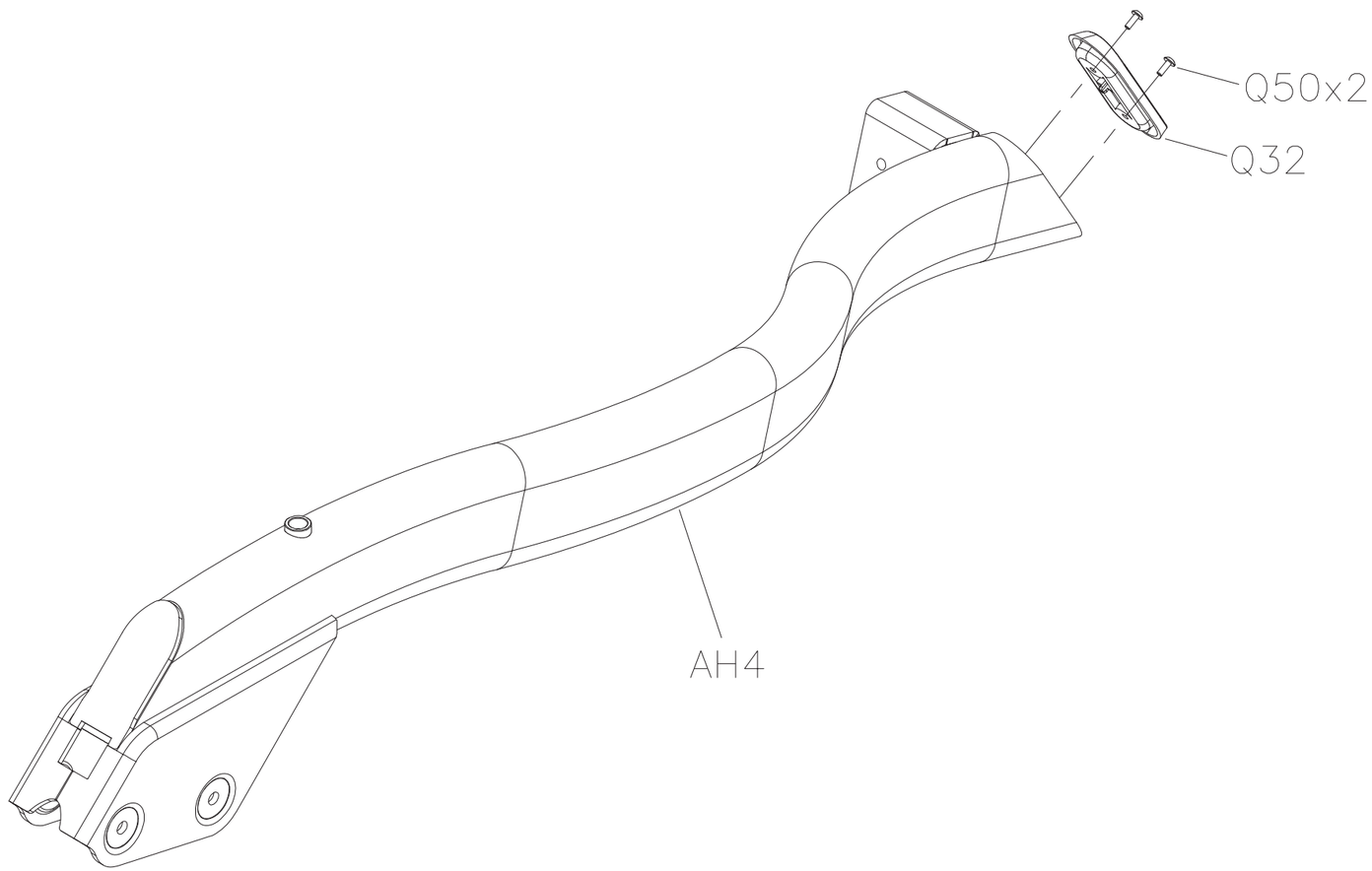

DRAWING NO	EP304-AR5		
PART NAME	DRIVE AXLE SET		
PART NO	1000206975	REV	B
APPROVE	tsaijw	DATE	20201027

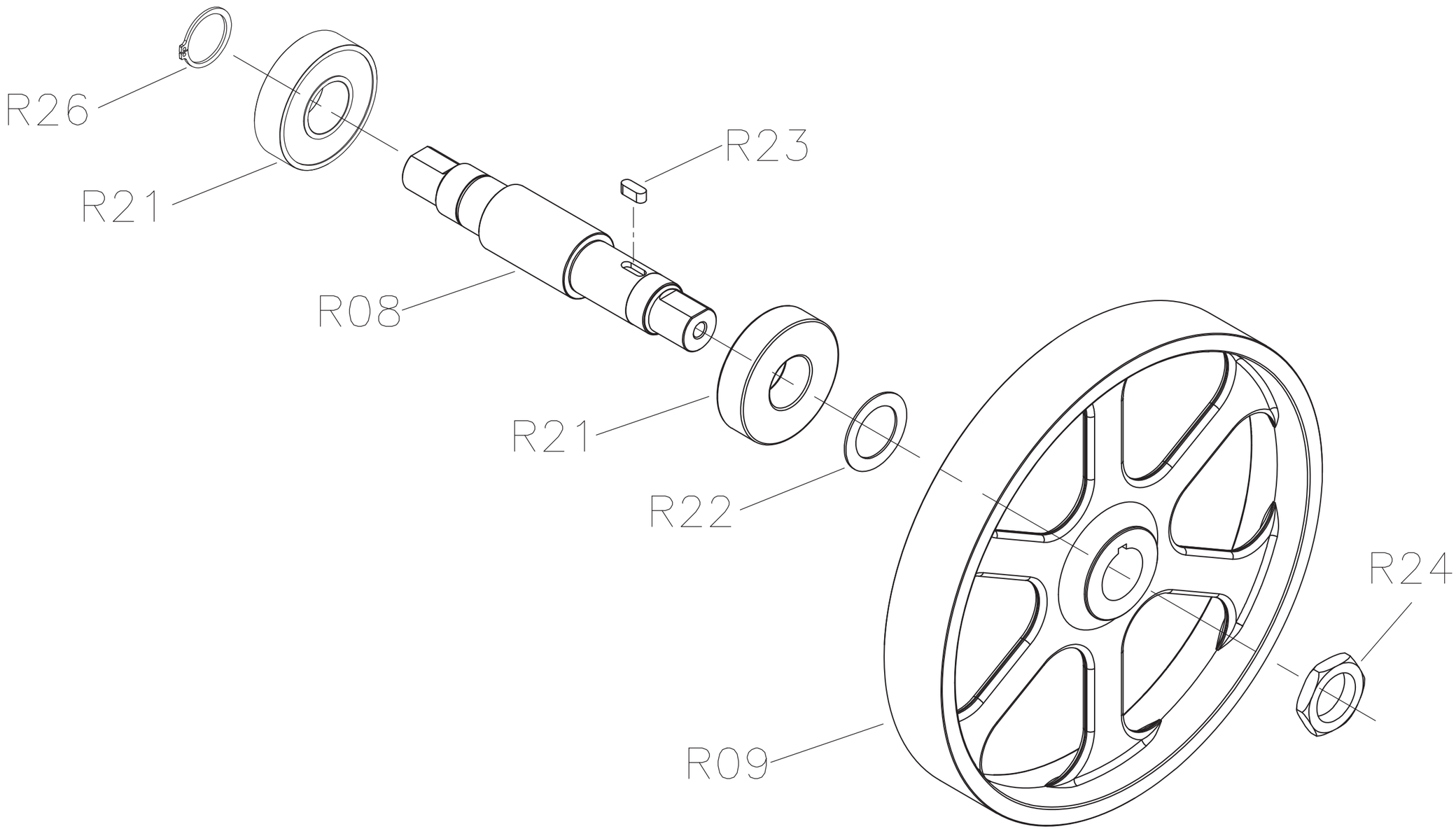

DRAWING NO	EP306-AB7		
PART NAME	ADJUST ROLLER SET		
PART NO	1000212320	REV	A
APPROVE	MAX	DATE	20101210

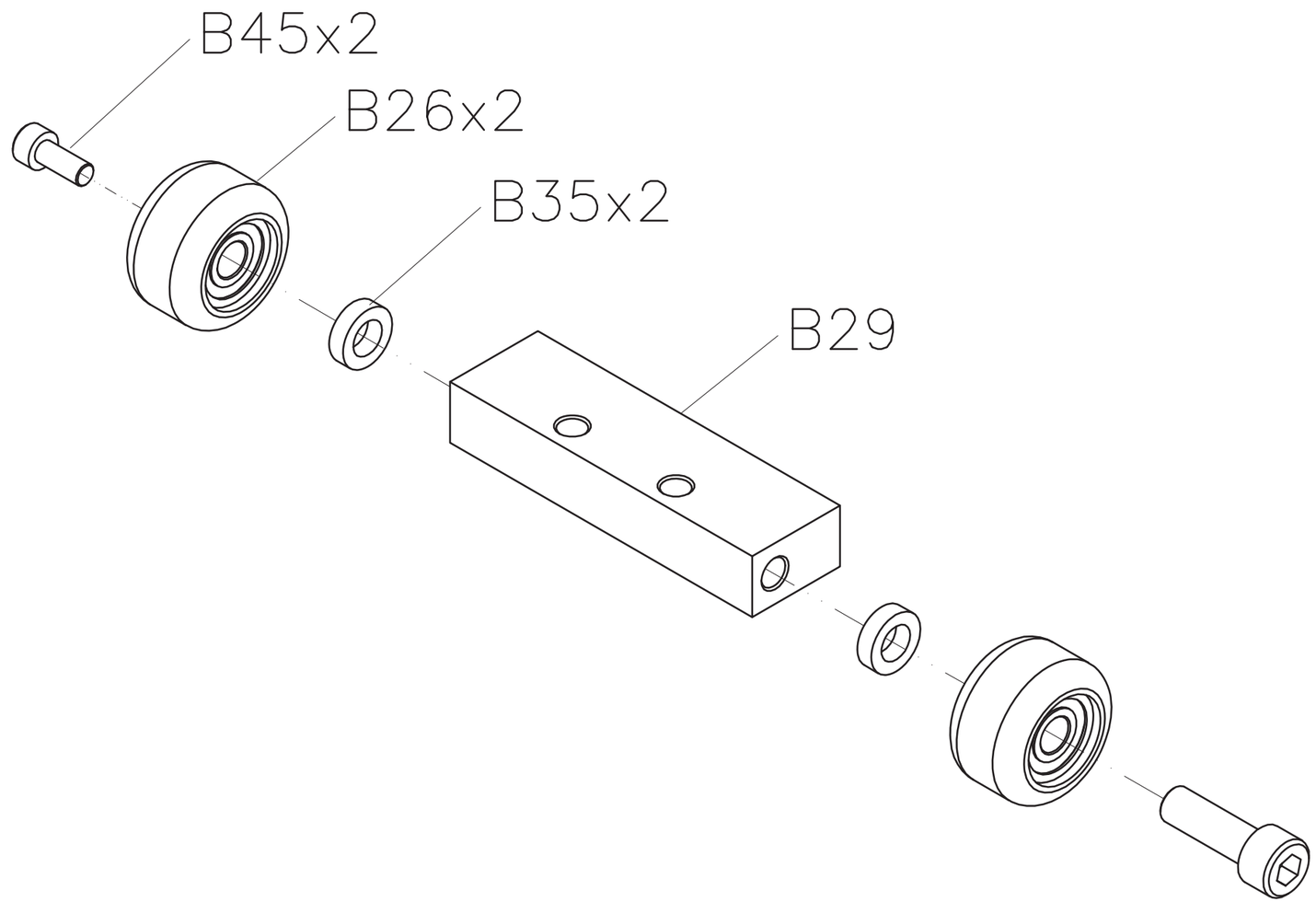

DRAWING NO	EP308-AJ13		
PART NAME	CRANK ROUND DISK SET		
PART NO	1000215874	REV	C
APPROVE	RICK	DATE	20220915

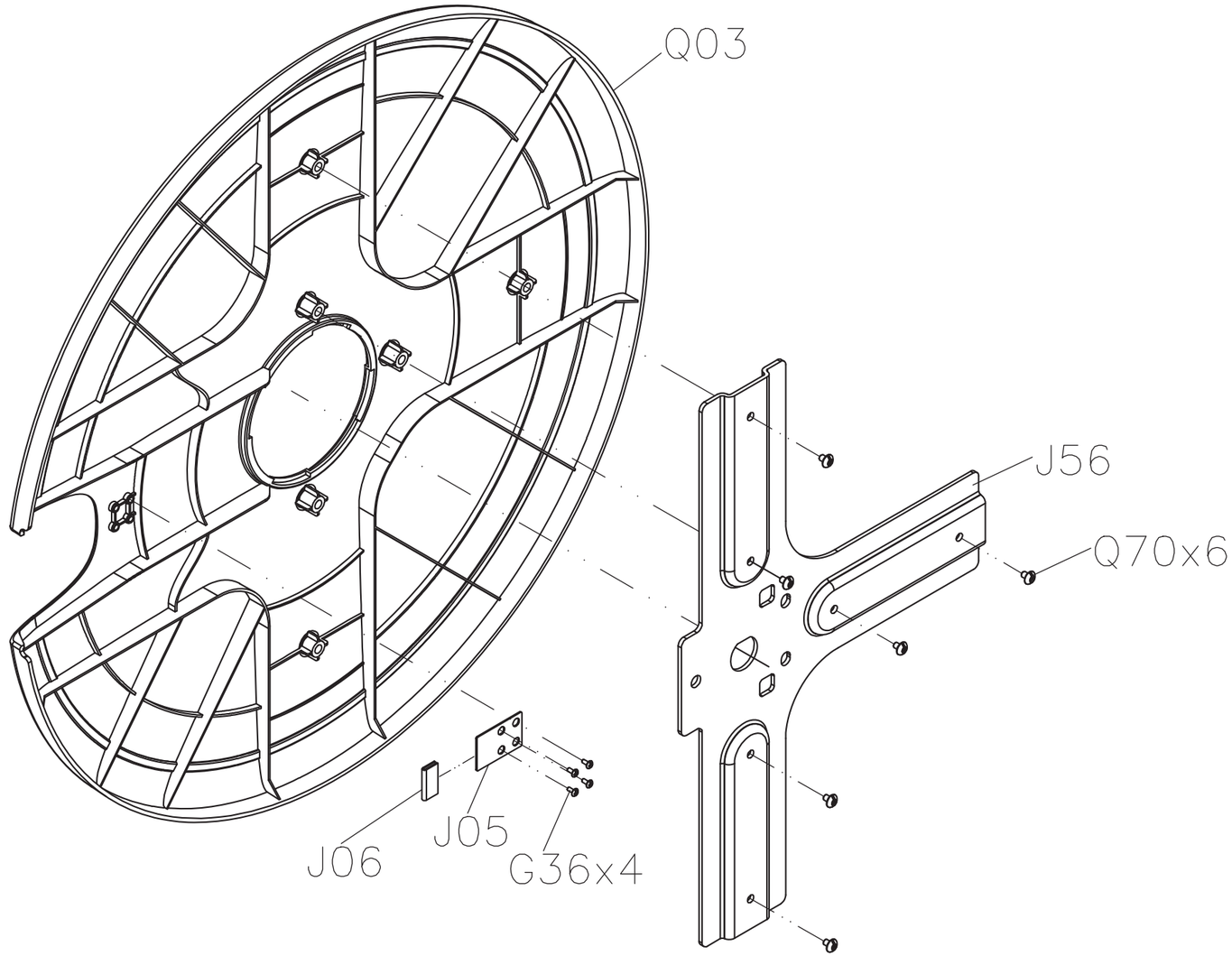

DRAWING NO	EP304-AR100		
PART NAME	Transmission Set+Tools		
PART NO	1000339505	REV	D
APPROVE	tsaijw	DATE	20201027

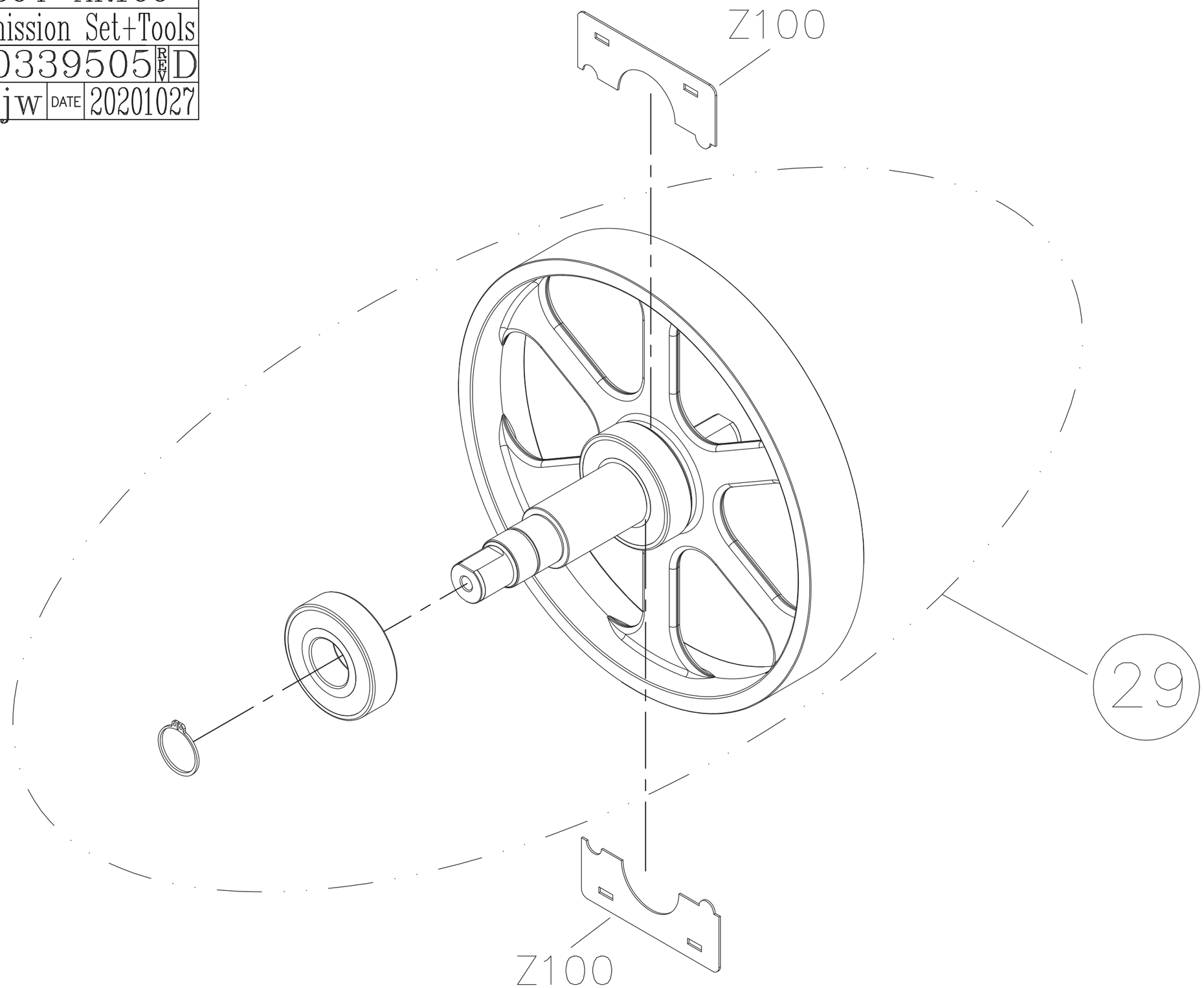

DRAWING NO	EP304B-AE5		
PART NAME	Crank Sleeve Set		
PART NO	1000347355	REV	C
APPROVE	RICK	DATE	073021

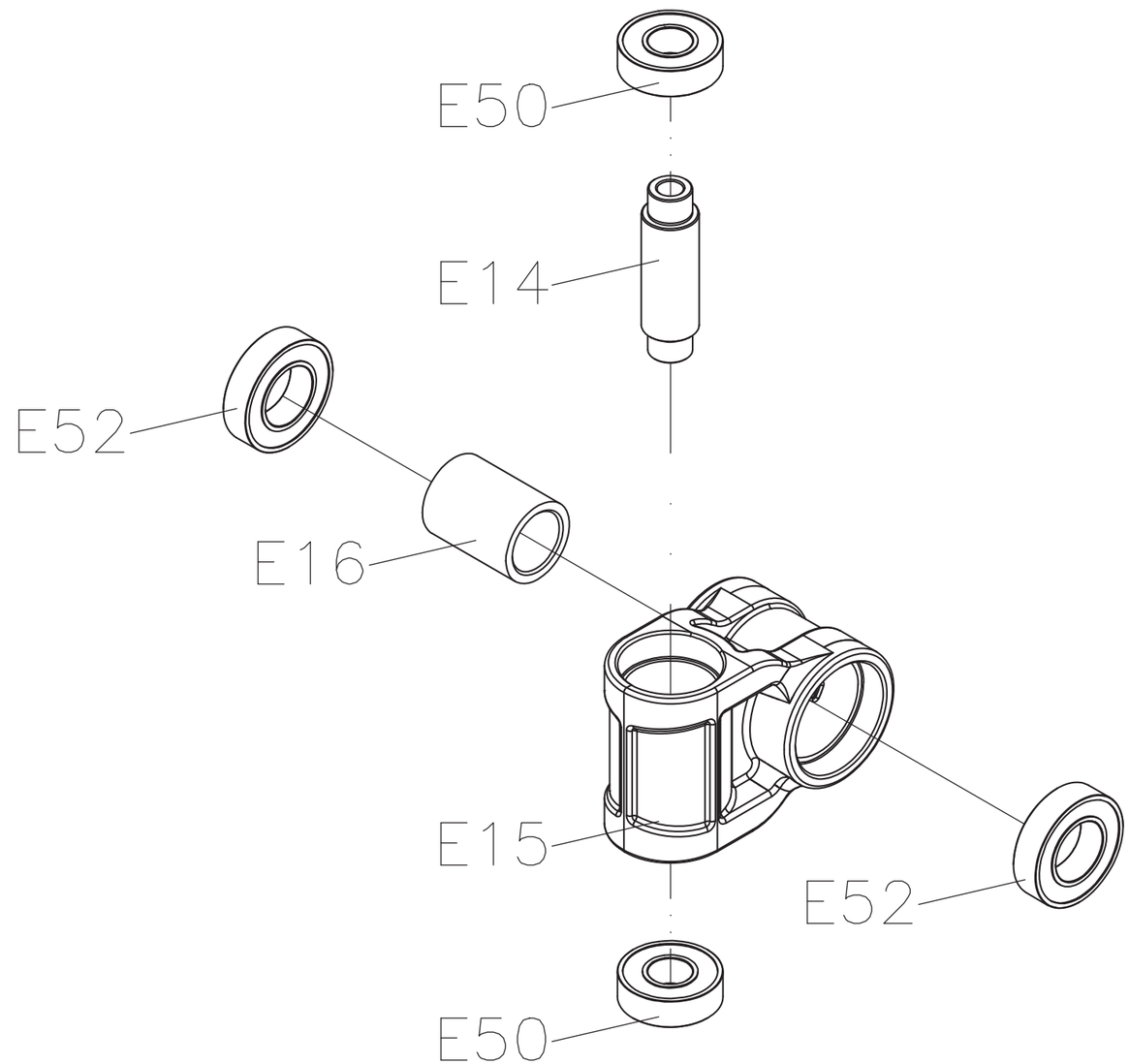

DRAWING NO	EP304M-AE11		
PART NAME	Pedal arm set;Right		
PART NO	1000417427	REV	A
APPROVE	AMELIE	DATE	20171130

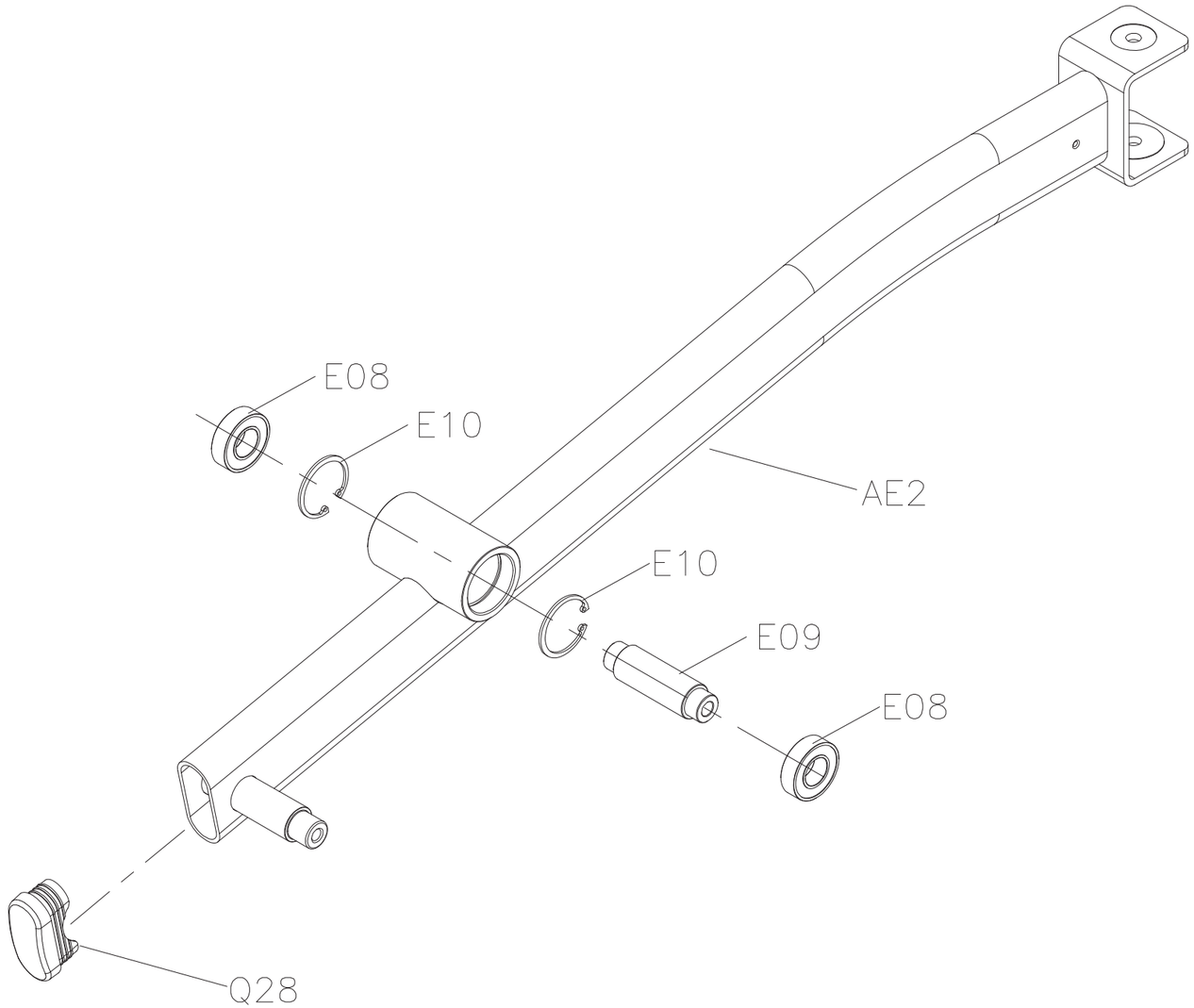

DRAWING NO	EP304M-AE12		
PART NAME	Pedal arm set;Left		
PART NO	1000417429	REV	A
APPROVE	AMELIE	DATE	20171130

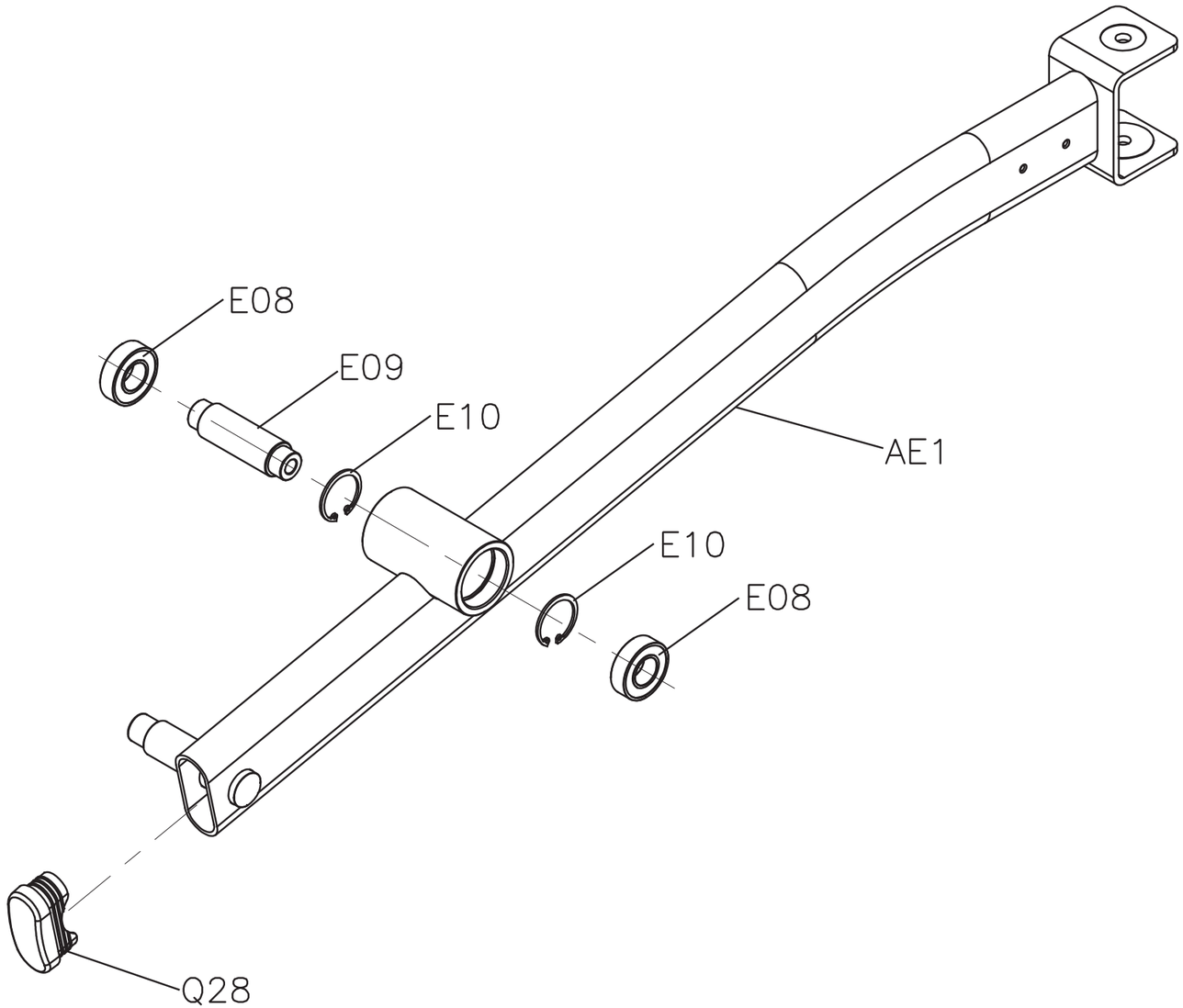

DRAWING NO	EP304M-AH25		
PART NAME	Swing Arm Set		
PART NO	1000417448	REV	A
APPROVE	AMELIE	DATE	20171201

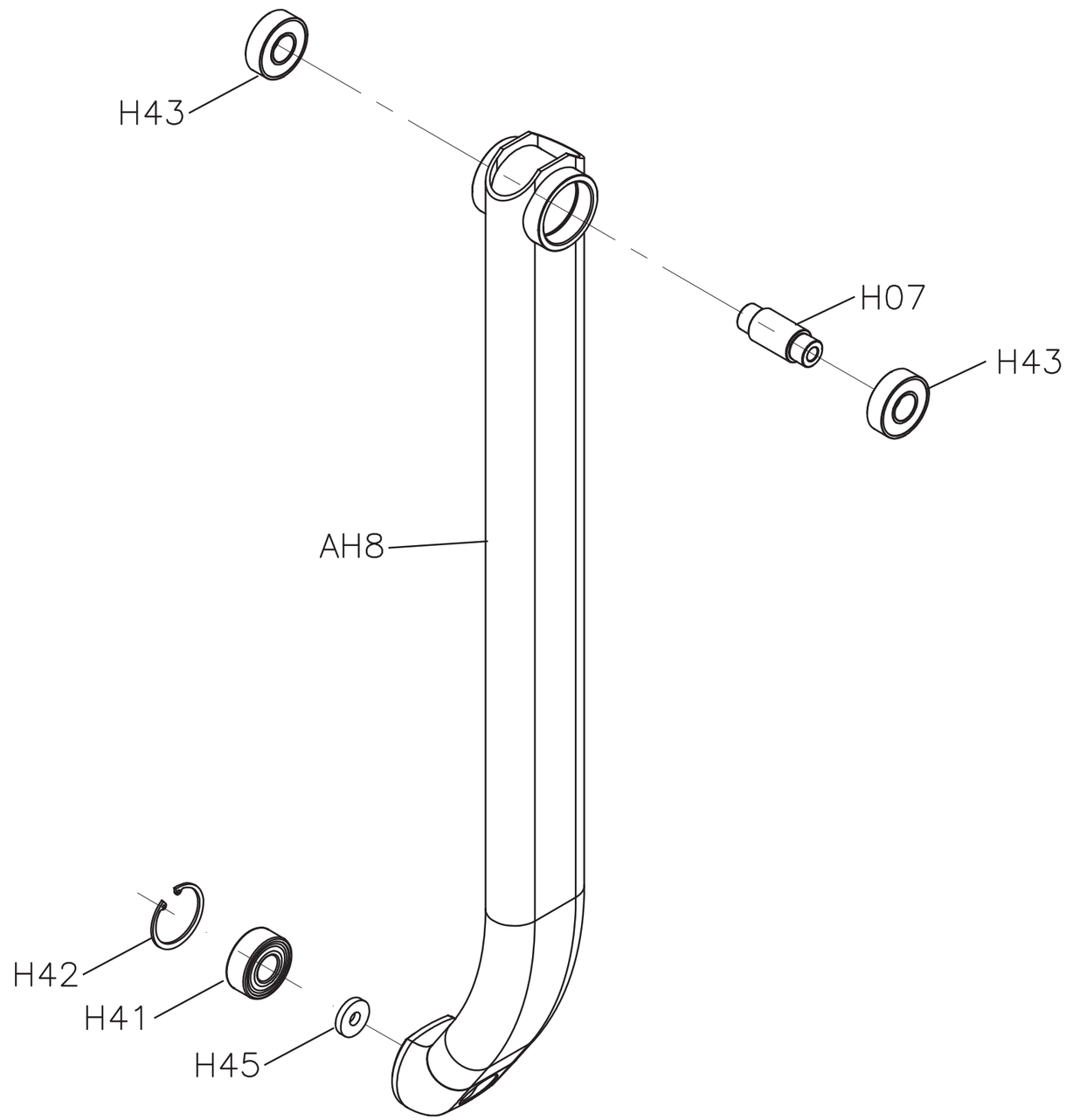

DRAWING NO	EP308L-AH21		
PART NAME	Link Arm;Right		
PART NO	1000417470 REV A		
APPROVE	AMELIE	DATE	20171201

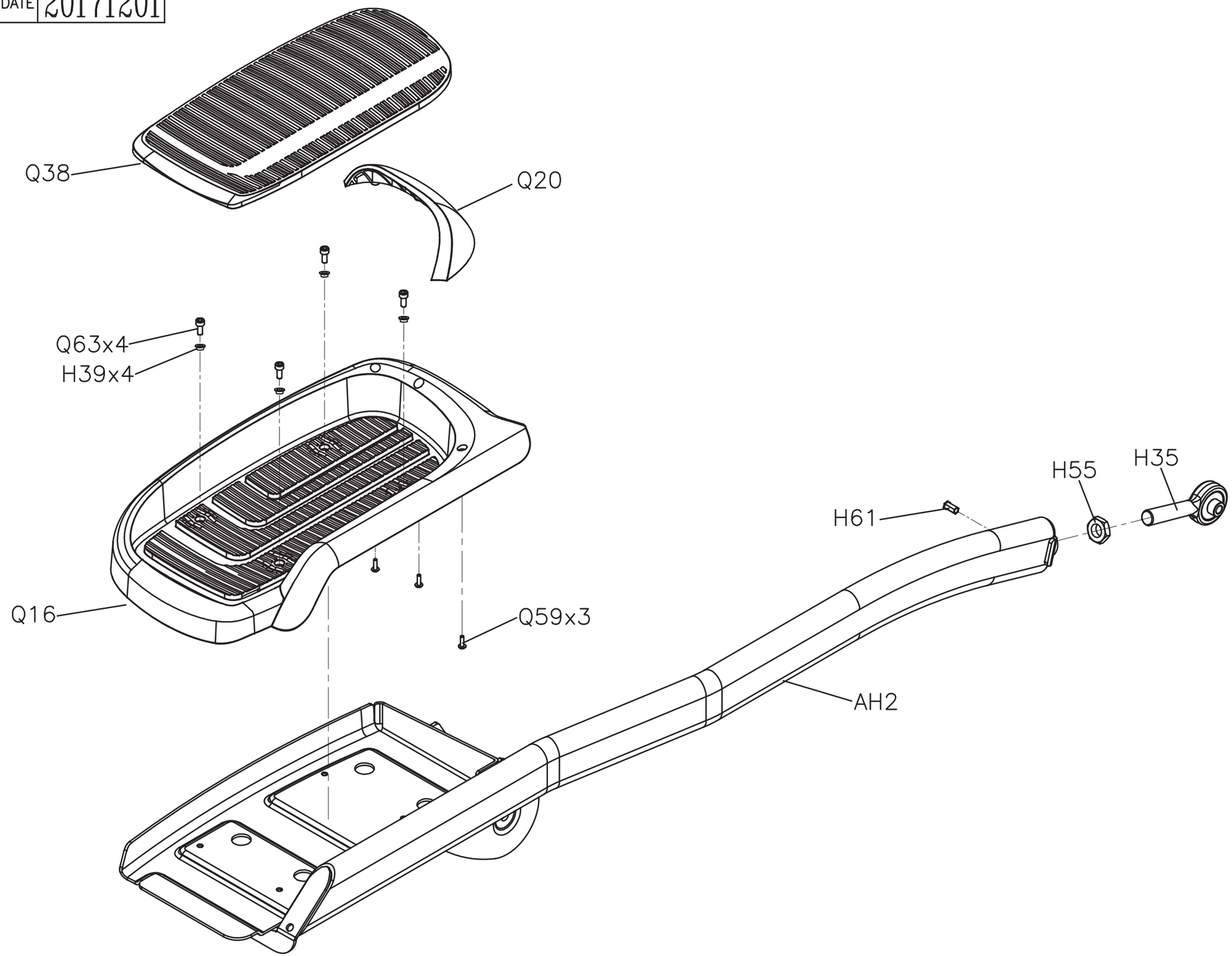

DRAWING NO	EP308L-AH22		
PART NAME	Link Arm;Left		
PART NO	1000417471	REV	A
APPROVE	AMELIE	DATE	20171201

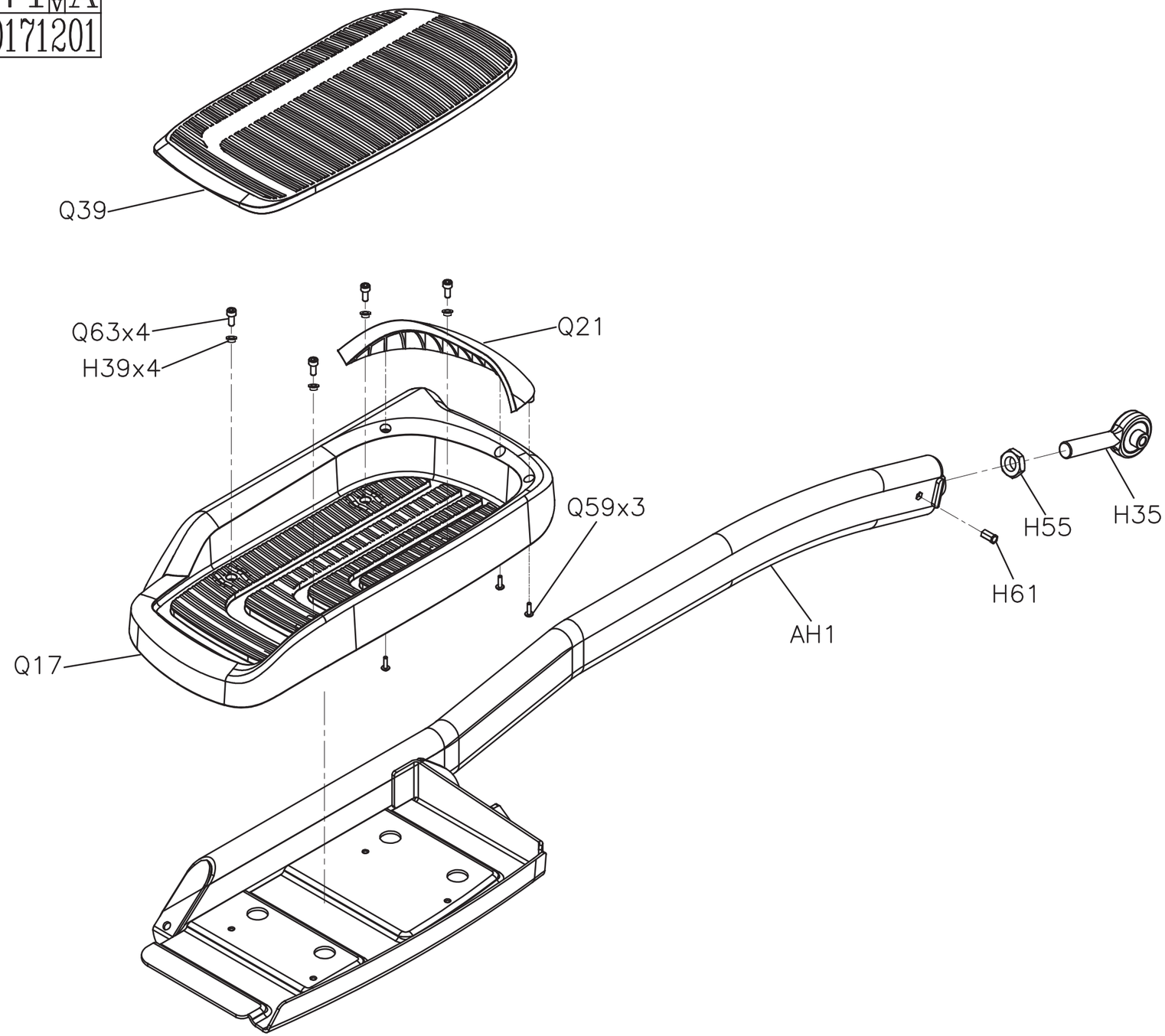

DRAWING NO	EP631-AG13		
PART NAME	Arm Rest set;front		
PART NO	1000433300	REV	B
APPROVE	AMBER	DATE	20190502

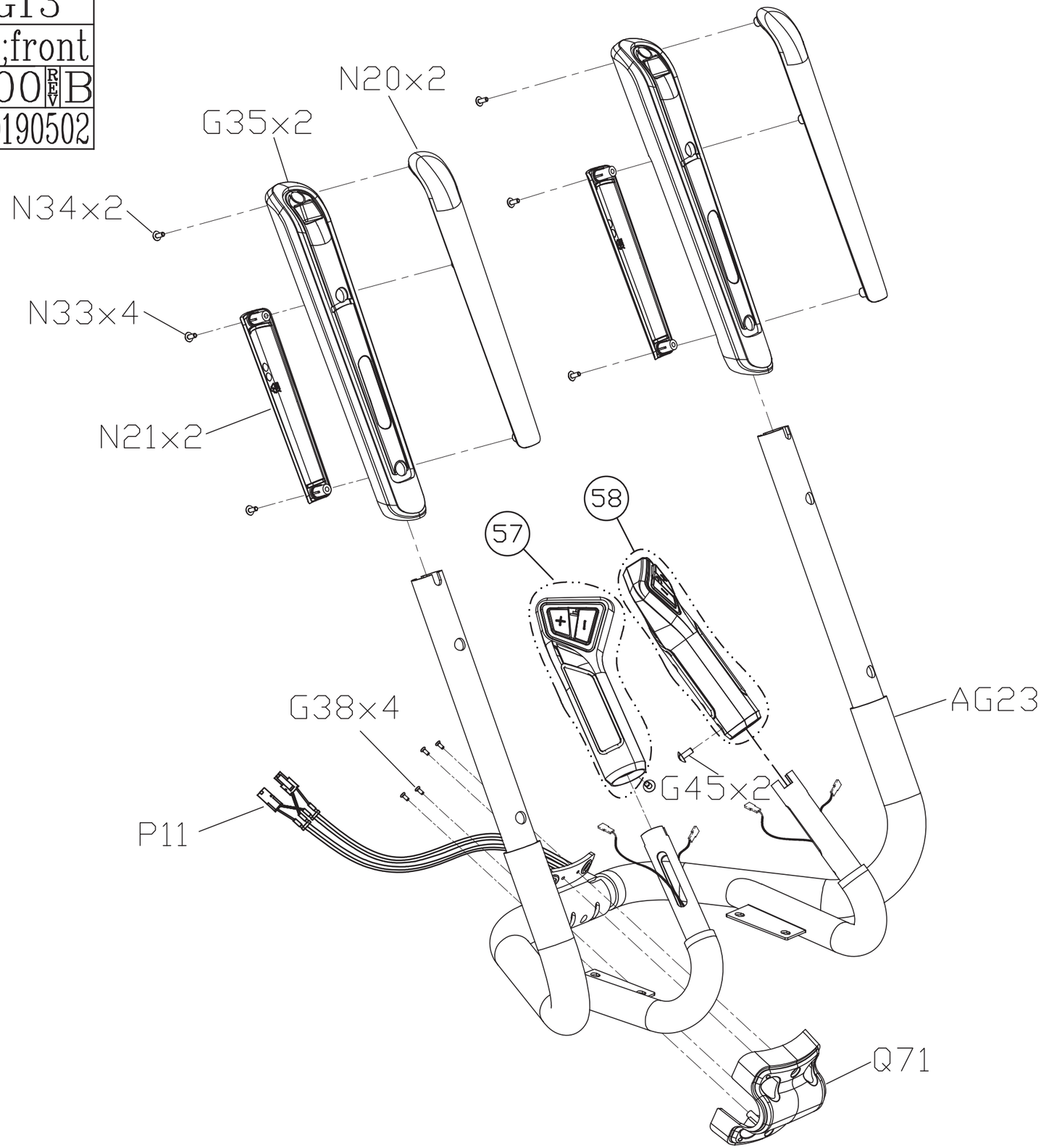

DRAWING NO	EP631-AG7		
PART NAME	Hand Pulse Set;Quickly Key;left		
PART NO	1000433344	REV	D
APPROVE	BROOK	DATE	20200302

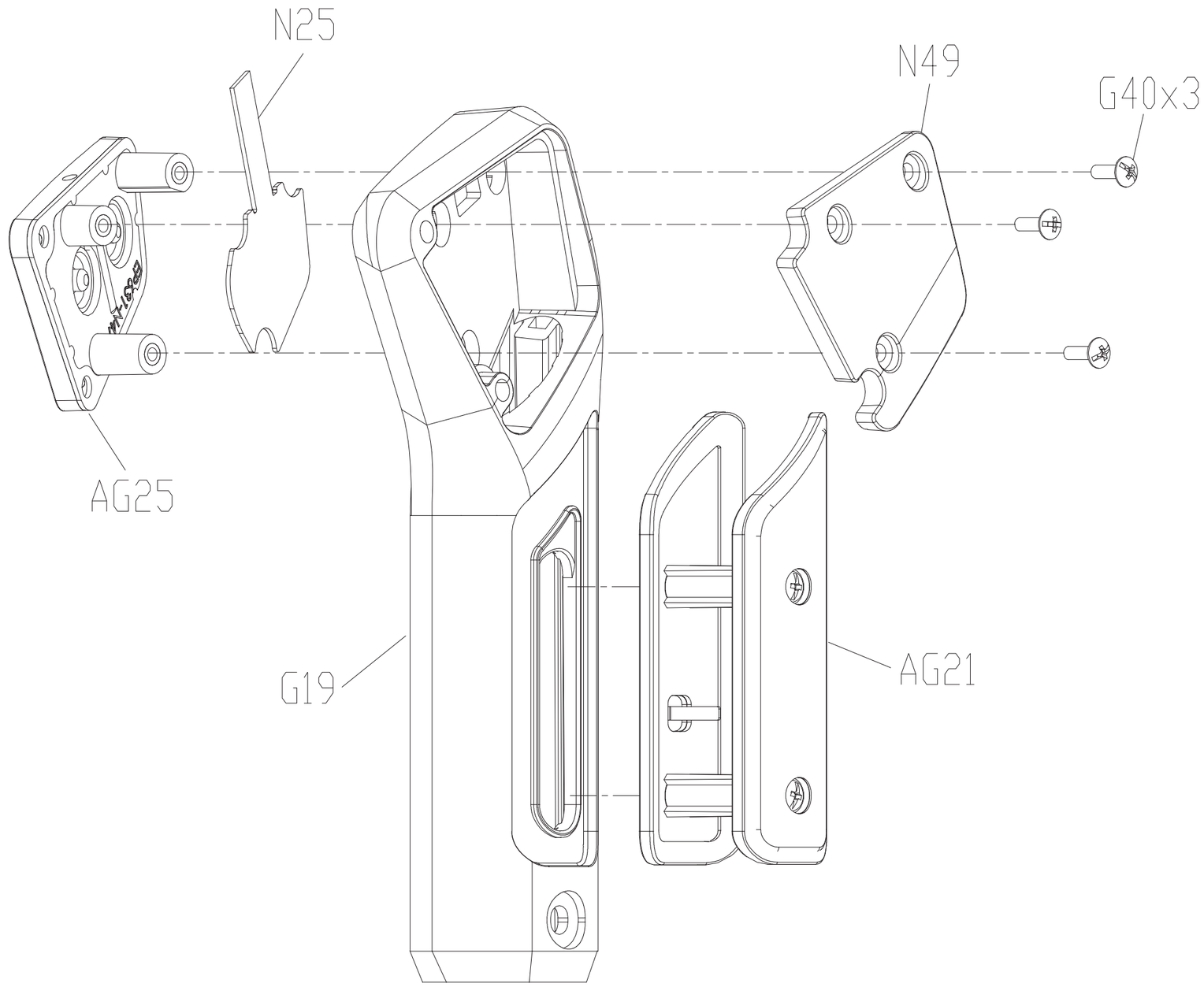

DRAWING NO	EP631-AG8		
PART NAME	Hand Pulse Set;Quickly Key;right		
PART NO	1000433345	REV	D
APPROVE	BROOK	DATE	20200302

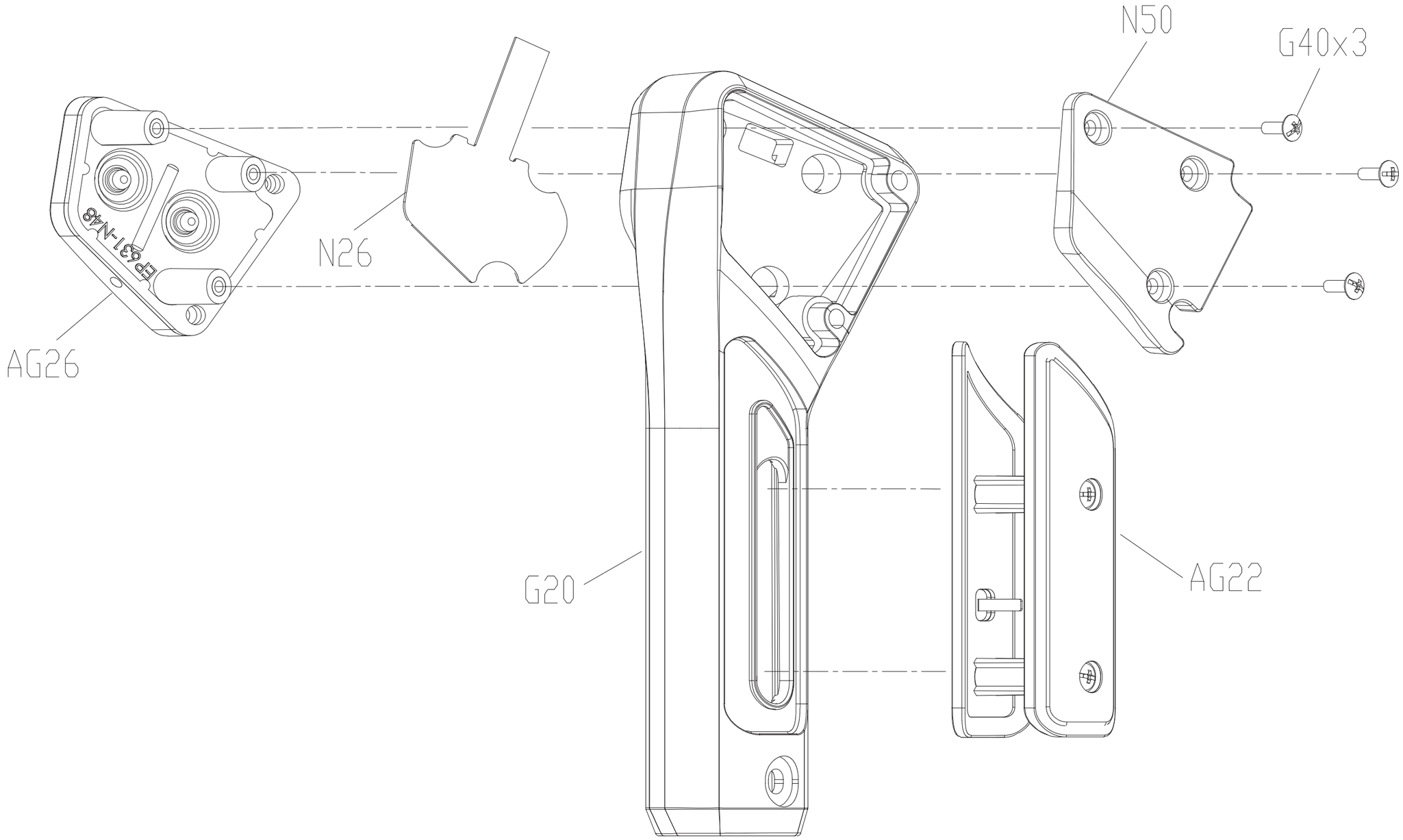

DRAWING NO	EP617B-AG11		
PART NAME	RIGHT HANDLEBAR SET		
PART NO	Such as a form	REV	B
APPROVE	S.T.C	DATE	20190814

SAP No.
1000384817
1000444239
1000473415

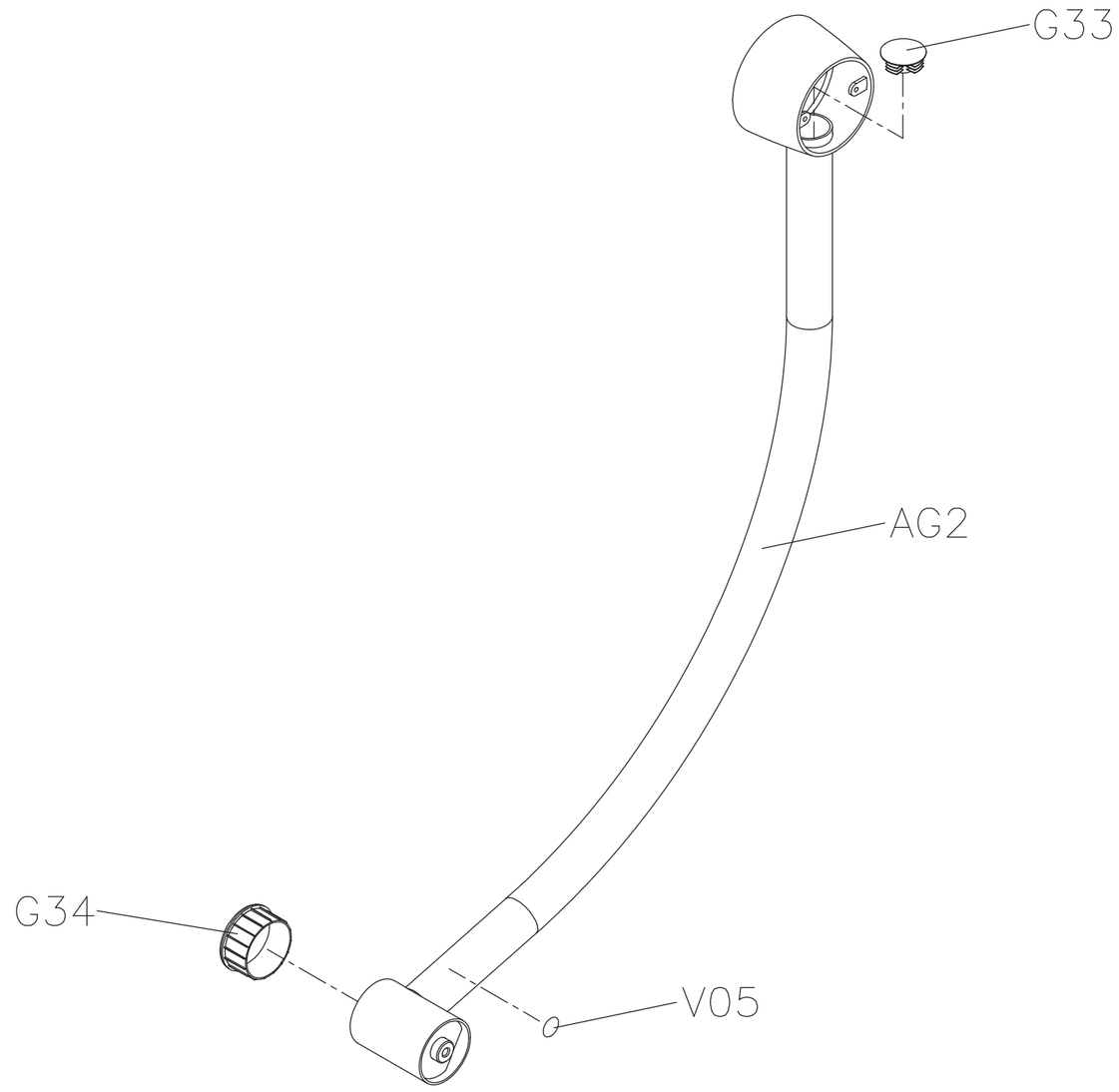

DRAWING NO	EP617B-AG12		
PART NAME	LEFT HANDLEBAR SET		
PART NO	Such as a form	REV	B
APPROVE	S.T.C	DATE	20190814

SAP No.
1000384819
1000444240
1000473420

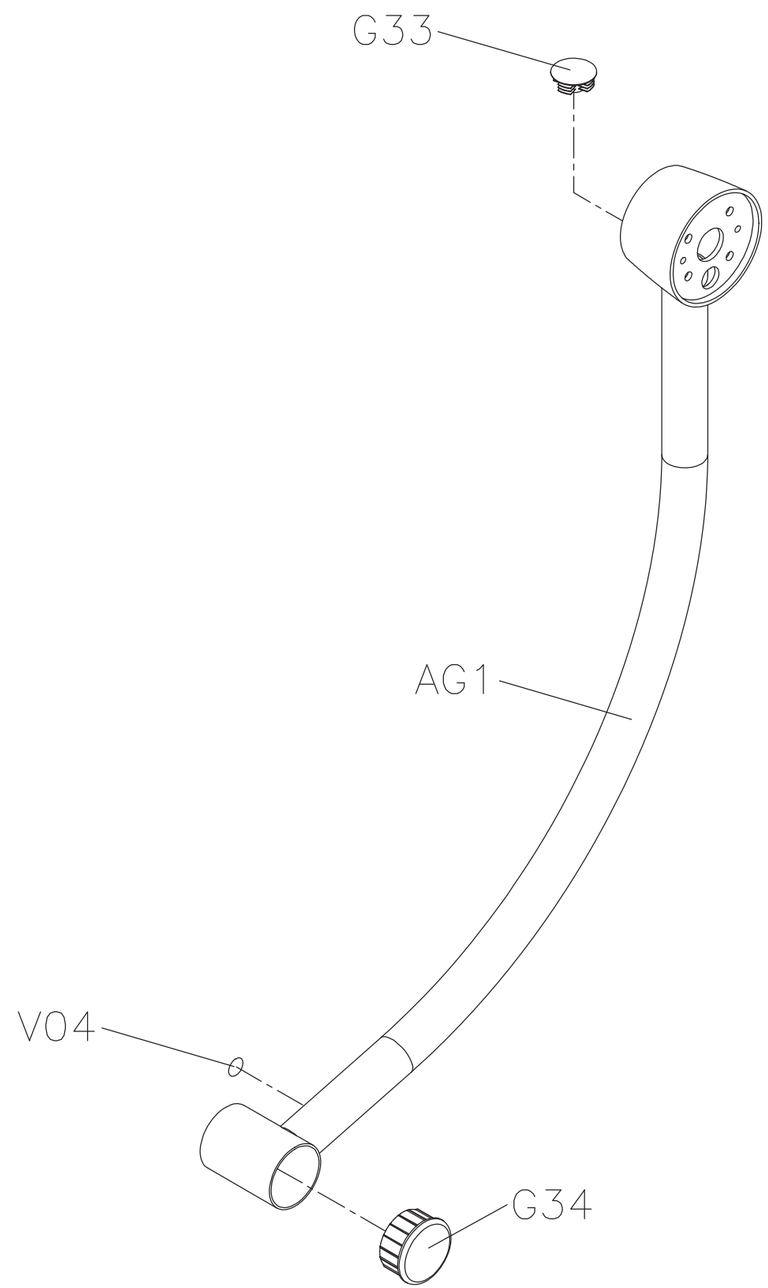

DRAWING NO	EP629-AH26		
PART NAME	ADJUSTMENT ARM SET		
PART NO	See attached chart	REV	D
APPROVE	Blazer	DATE	20201230

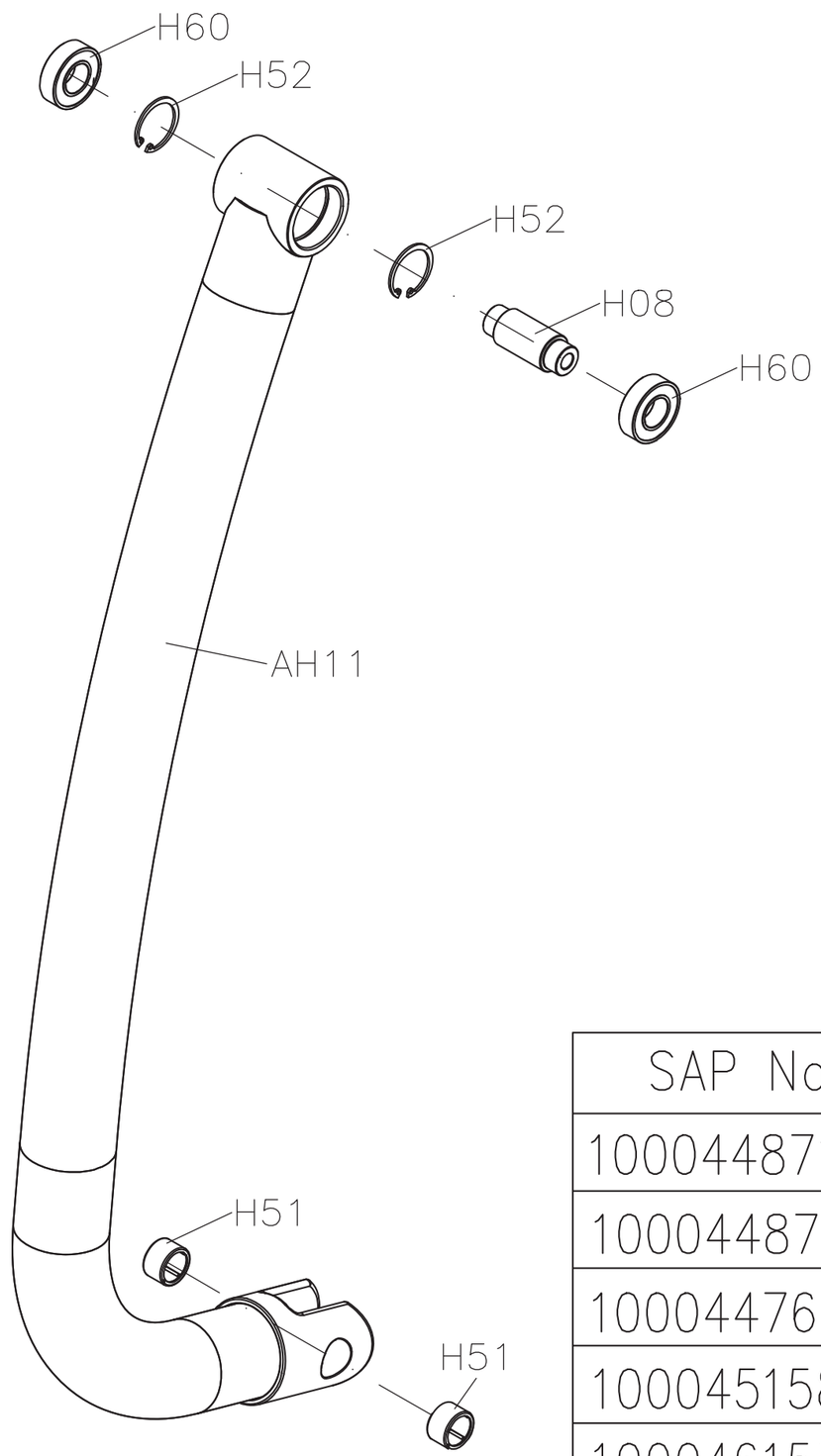

SAP No.	Description
1000448717	SILVER
1000448720	DOUBLE BLACK MATTE
1000447622	DOUBLE GRAPHITE GREY 202020
1000451588	Lace White
1000461538	Sun Orange

DRAWING NO	EP630-AH29		
PART NAME	ADJUSTMENT ARM SET		
PART NO	See attached chart	REV	C
APPROVE	Amelie	DATE	20200701

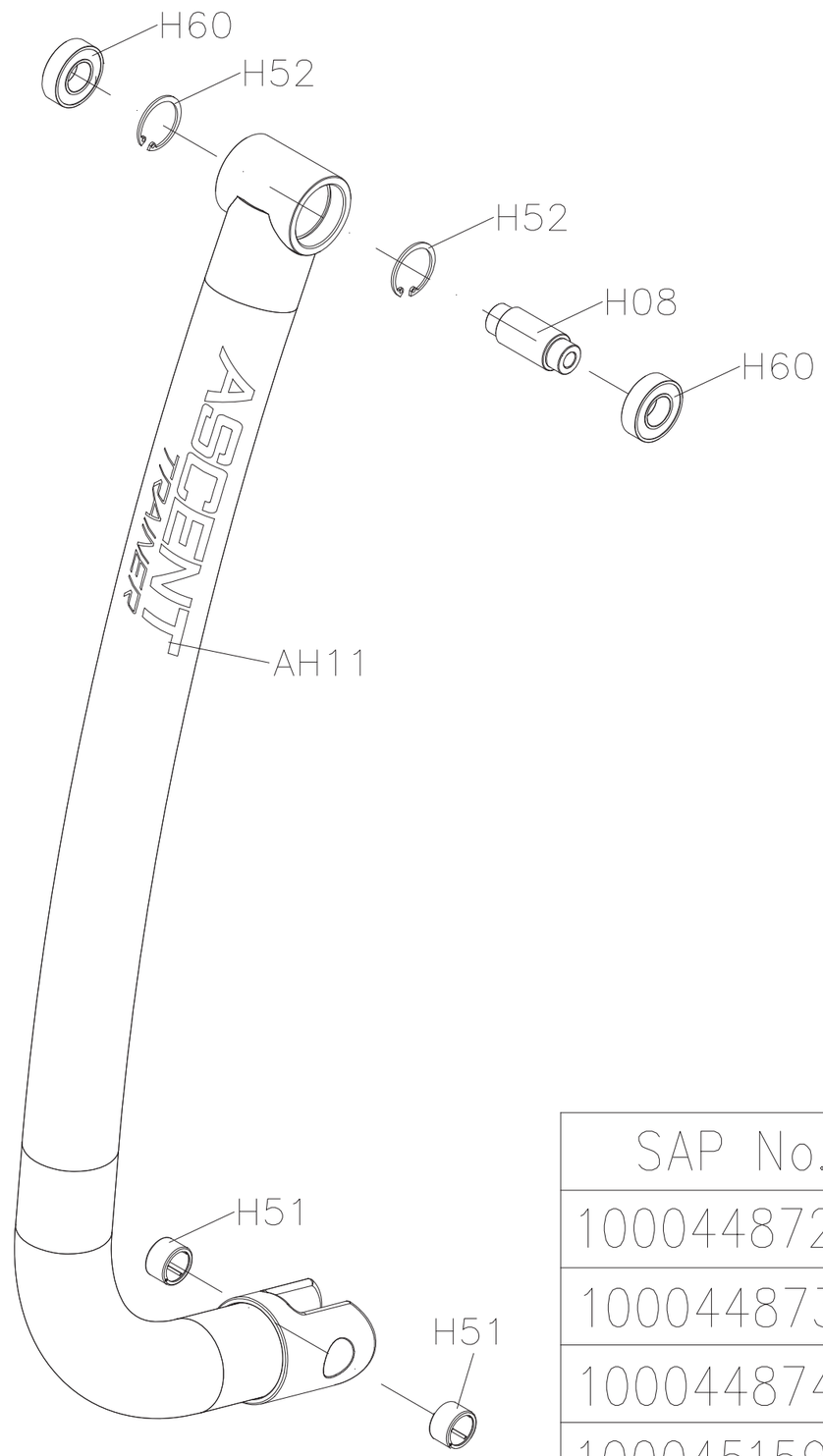

SAP No.	Description
1000448727	SILVER
1000448735	DOUBLE BLACK MATTE
1000448740	DOUBLE GRAPHITE GREY 202020
1000451595	Lace White

DRAWING NO	EP304-AG15		
PART NAME	ROTATION HOUSING ASSEMBLY SET		
PART NO	See attached chart	REV	D
APPROVE	Addie	DATE	20210722

SAP No.	Description
0000094951	BAN
1000469139	Paint

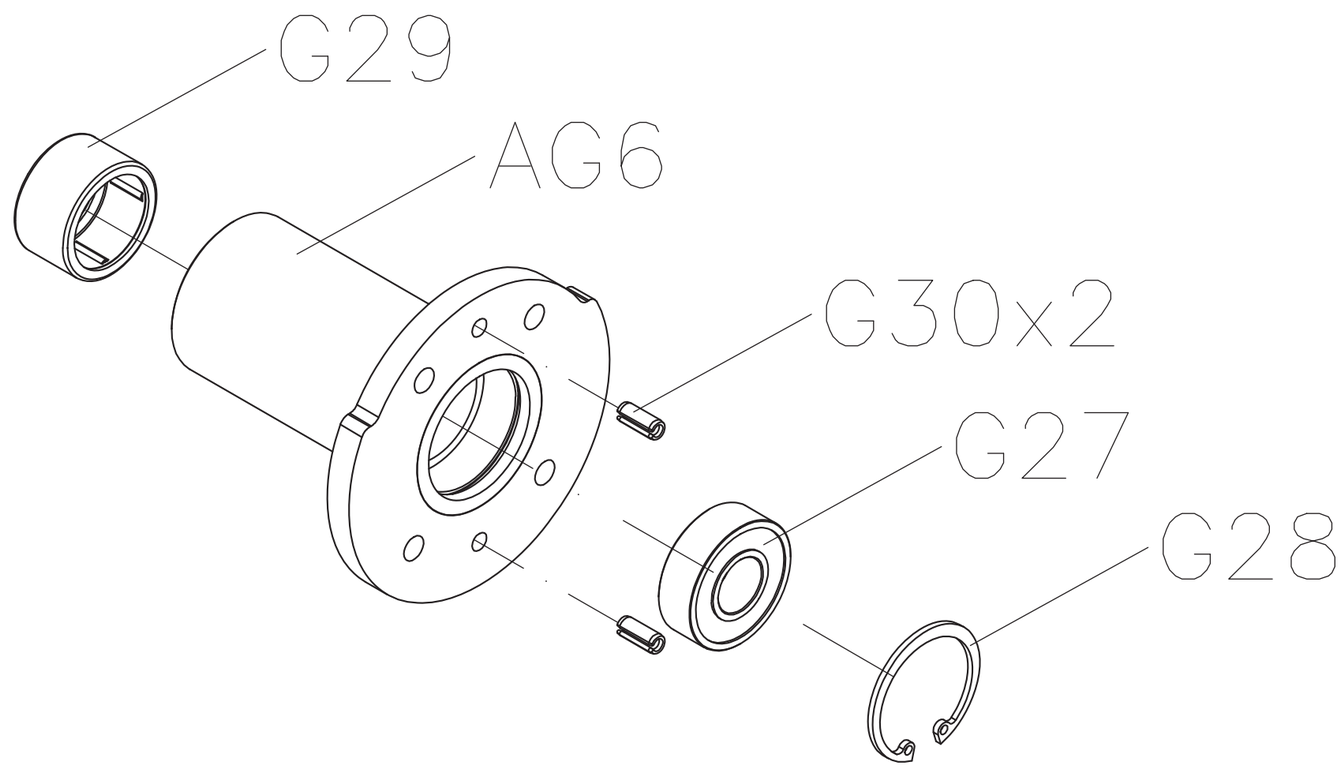

DRAWING NO	EP629-AC11		
PART NAME	CONSOLE MAST SET		
PART NO	See attached chart	REV	G
APPROVE	Addie	DATE	20210722

SAP No.	Description
1000433240 1000469150	SLIVER
1000442289 1000469151	DOUBLE BLACK MATTE
1000447608 1000469152	DOUBLE Graphite Grey 202020
1000451579 1000469153	Lace White
1000461529	Sun Orange

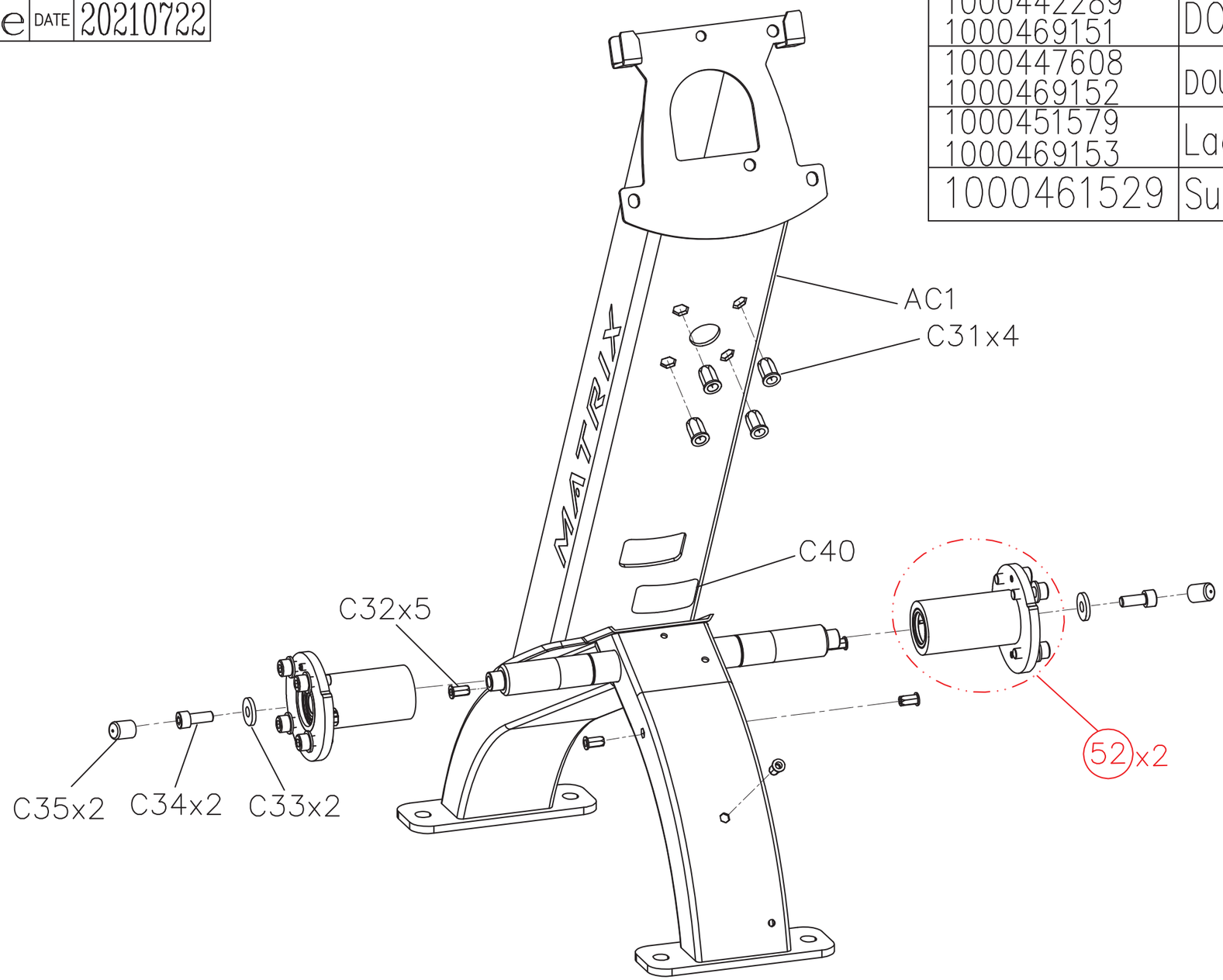
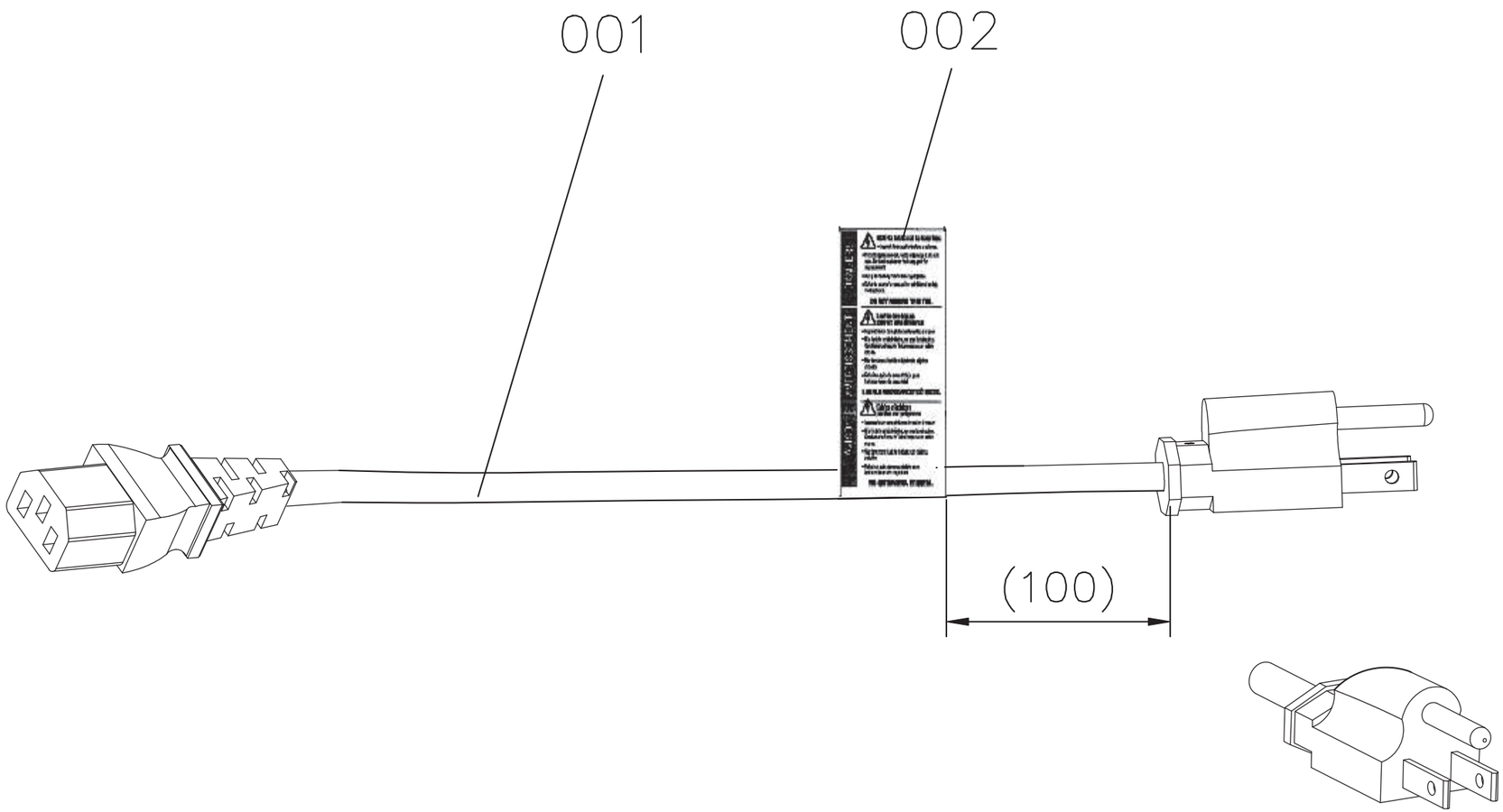
DRAWING NO	CORD-P216		
PART NAME	POWERCORD SET		
PART NO	10000473321	REV	B
APPROVE	Sunny	DATE	112322