HORIZON
FITNESS

CE6.0

PEP506B-1US

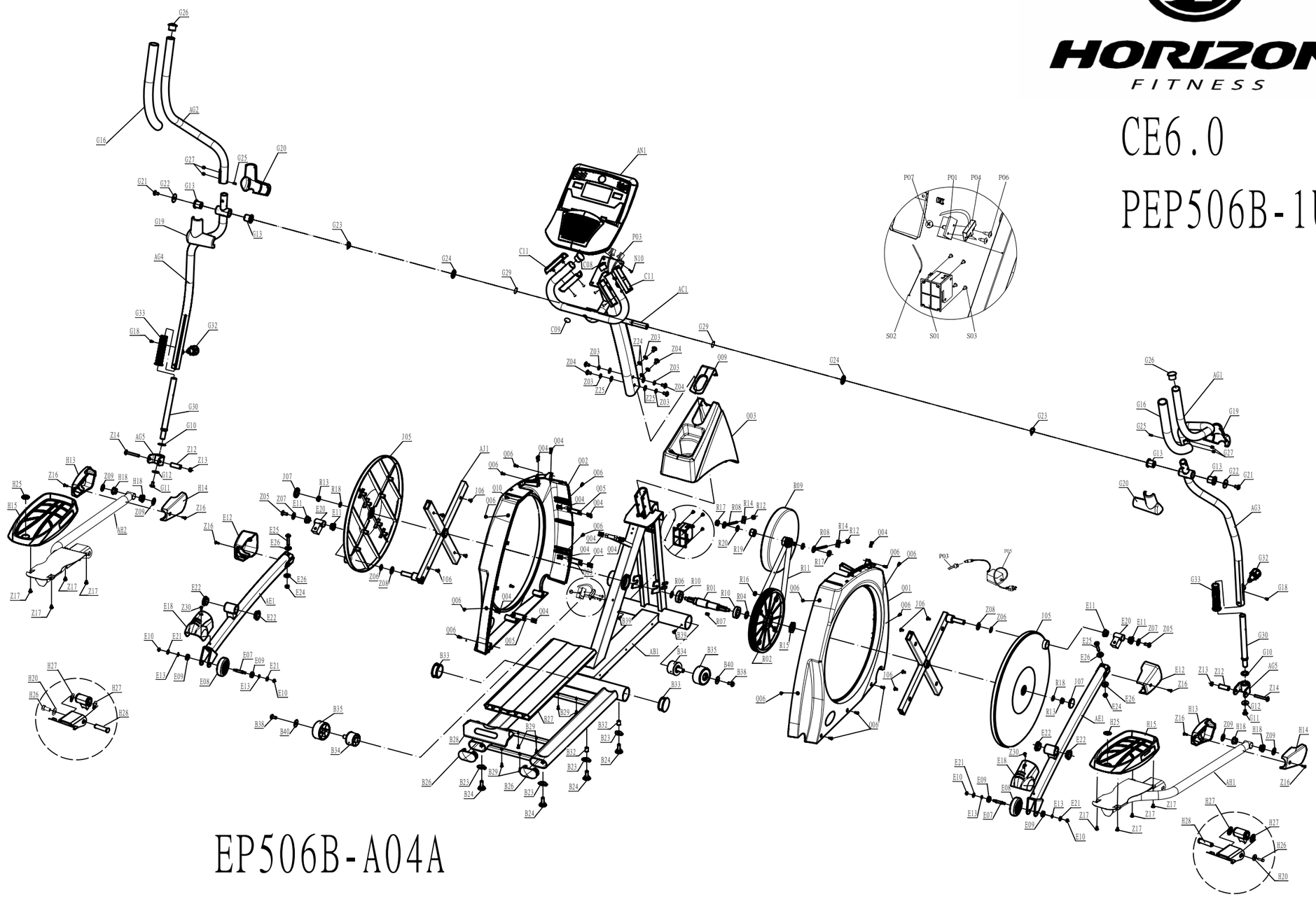

EP506B-A04A

2008-05-28