HORIZON FITNESS
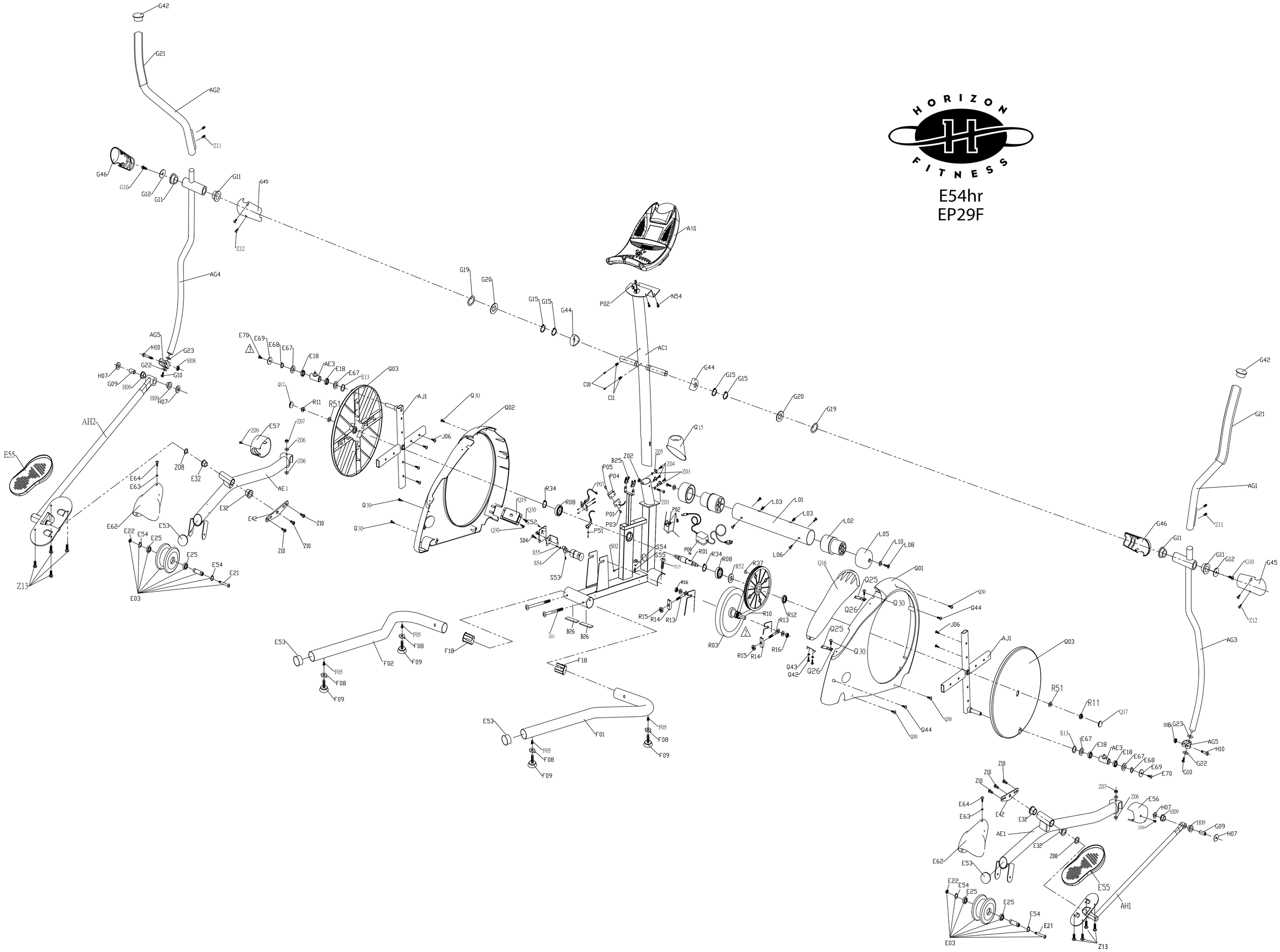
E54hr
EP29F