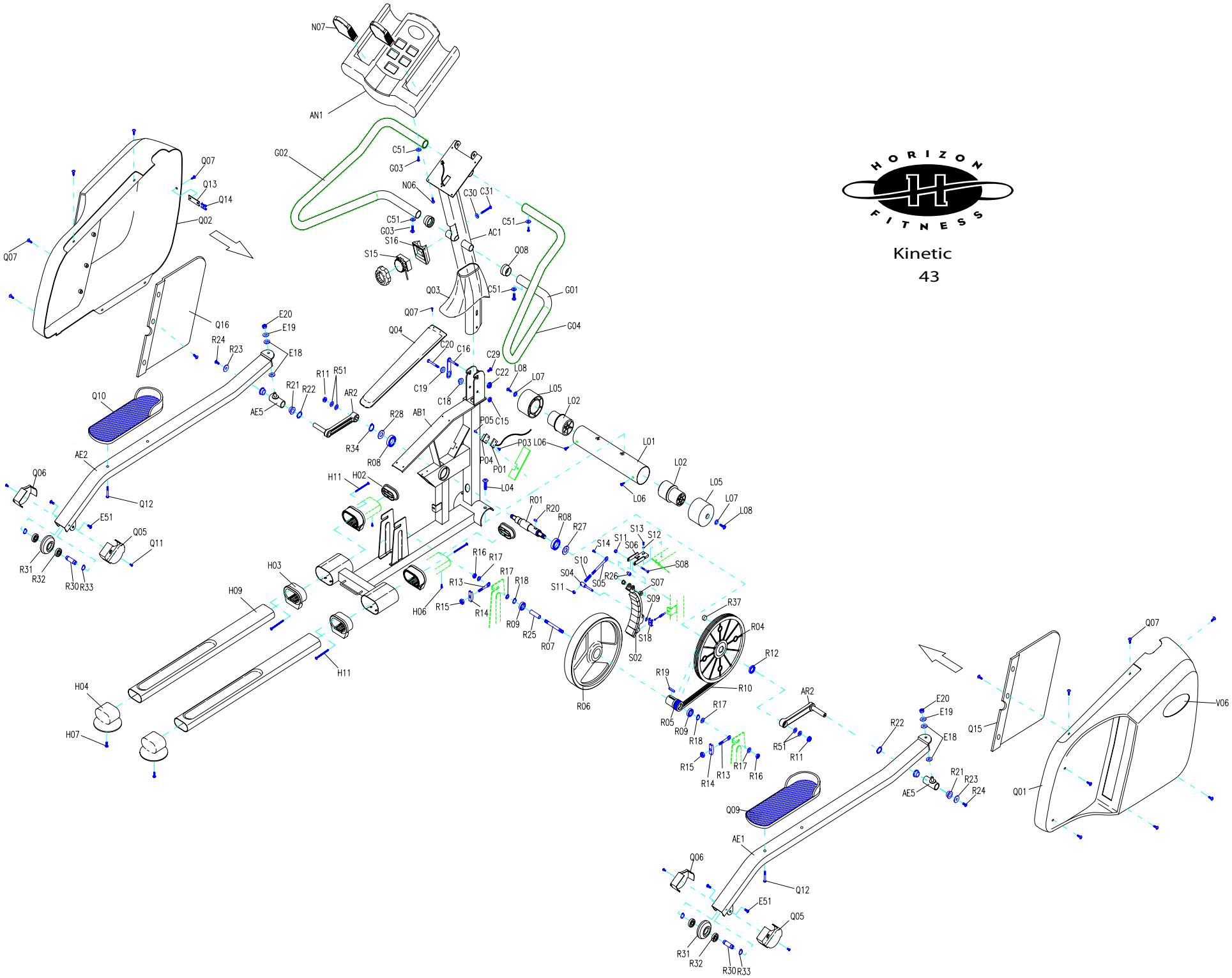

HORIZON FITNESS

Kinetic

43