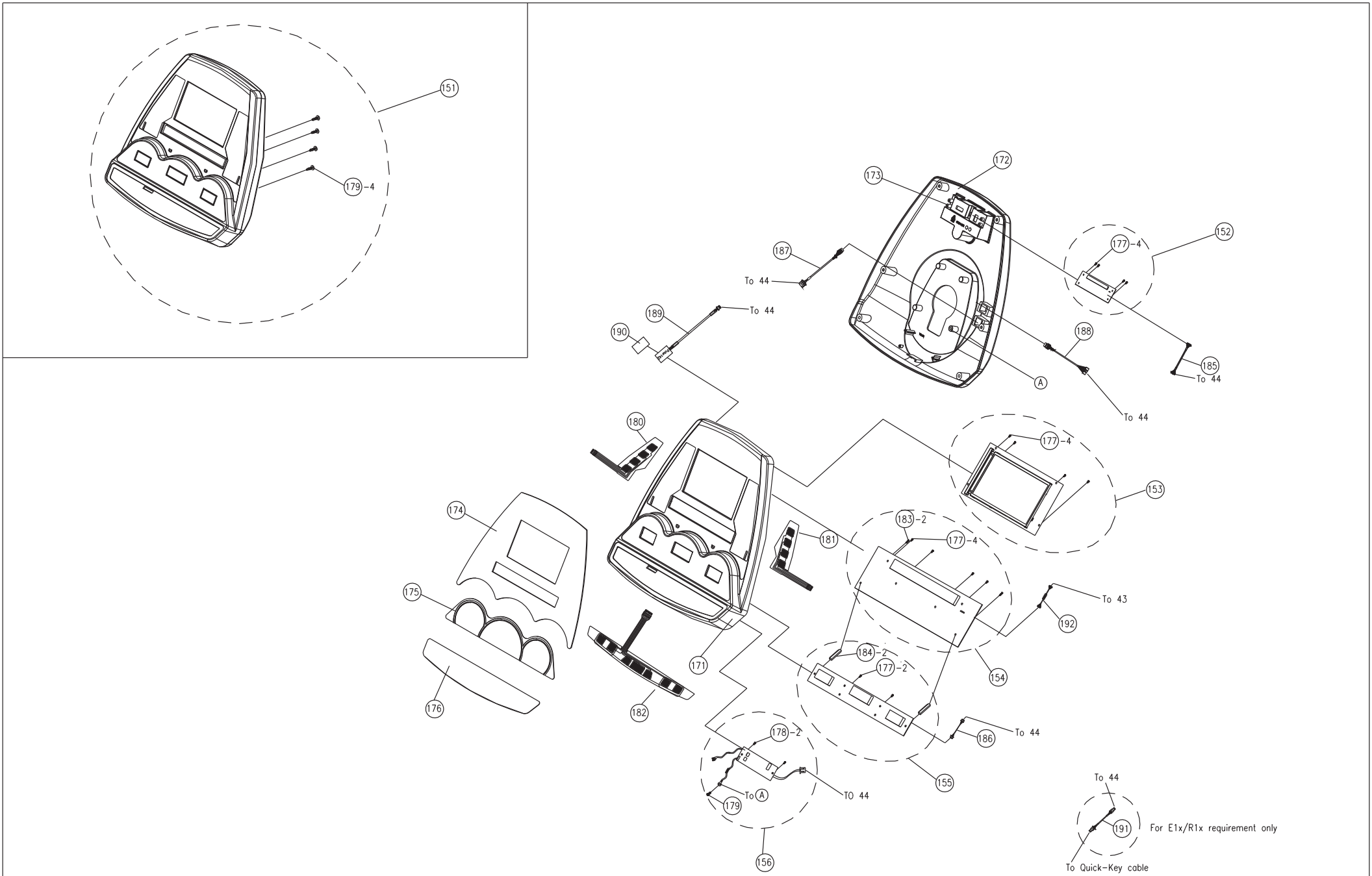

Service drawing of Matrix R1x/U1x console