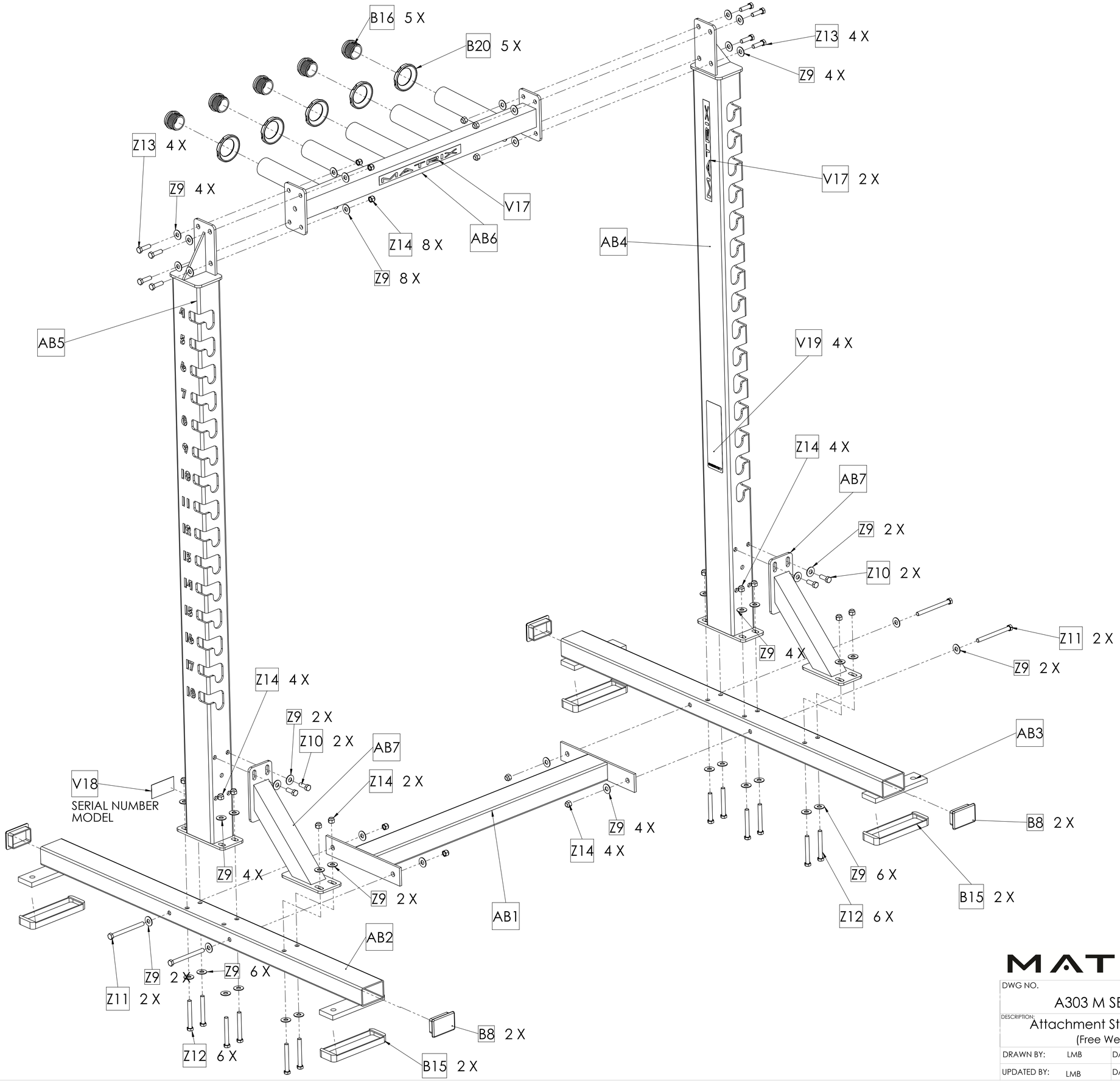

MATRIX

DWG NO.	A303 M SERVICE		
DESCRIPTION:	Attachment Storage Rack (Free Weights)		
DRAWN BY:	LMB	DATE:	2013.MAR.07
UPDATED BY:	LMB	DATE:	2015.SEP.23