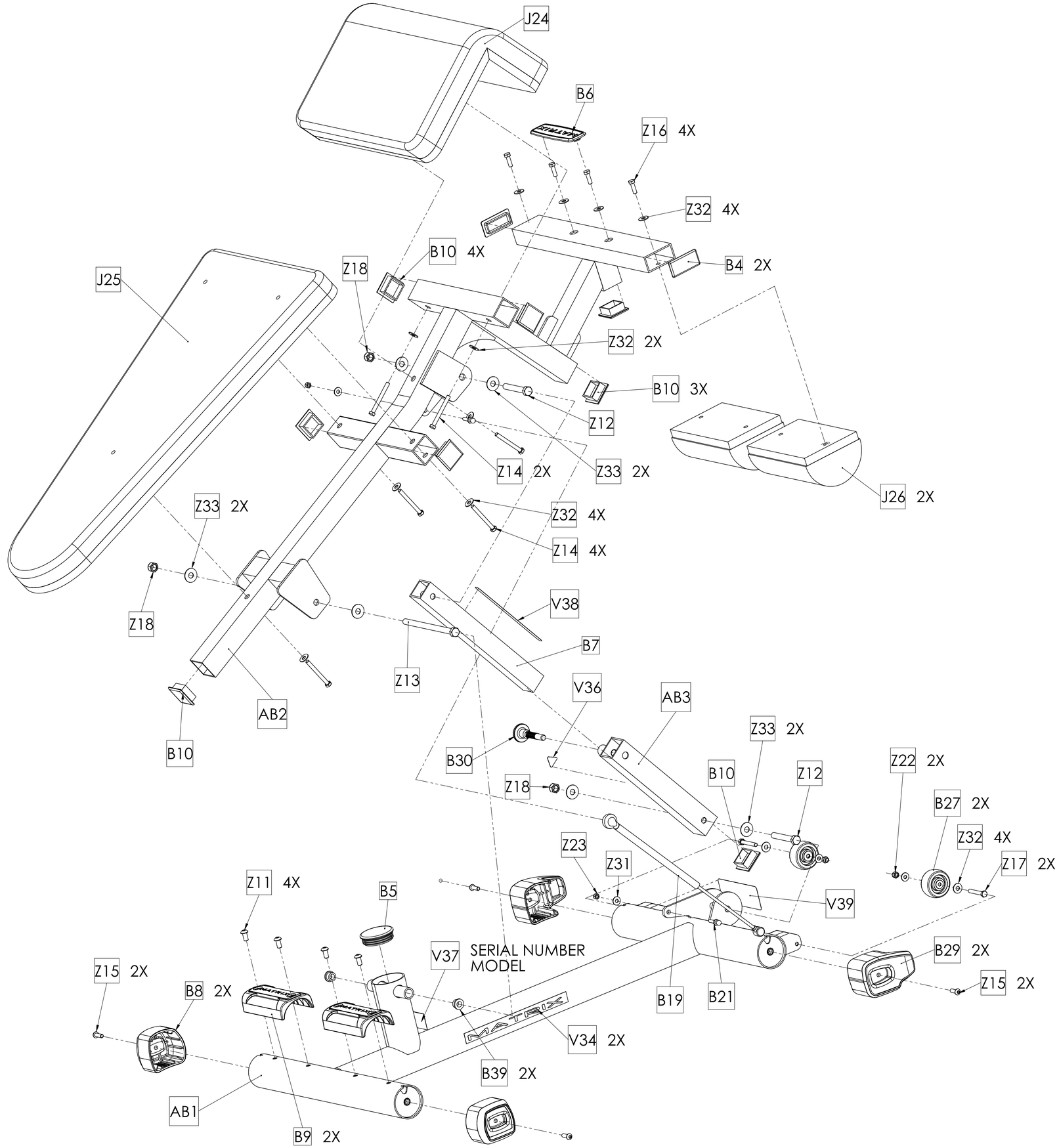


MATRIX

| | | | |
|---|---|---|---|
| DWG NO. | A61 M SERVICE | | |
| DESCRIPTION: | Adjustable Decline Bench (Free Weights) | | |
| DRAWN BY: | JOHN | DATE: | 2013.MAR.01 |
| UPDATED BY: | LMB | DATE: | 2016.DEC.12 |