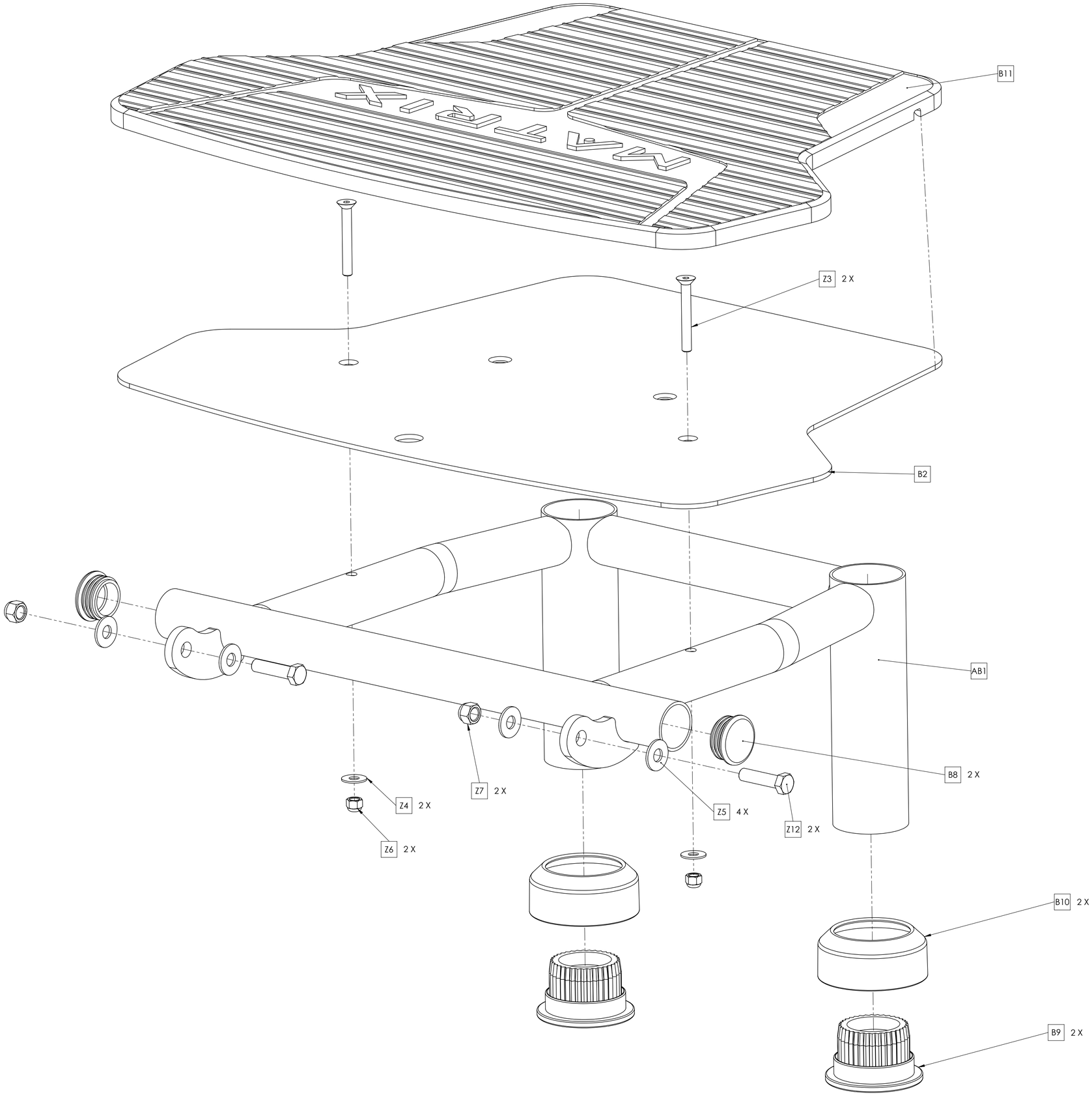

MATRIX

DWG NO.	AOSP SERVICE
DESCRIPTION:	SPOTTER STAND LARGE
DRAWN BY: LMB	DATE 13.11.01
UPDATED BY: --	DATE --