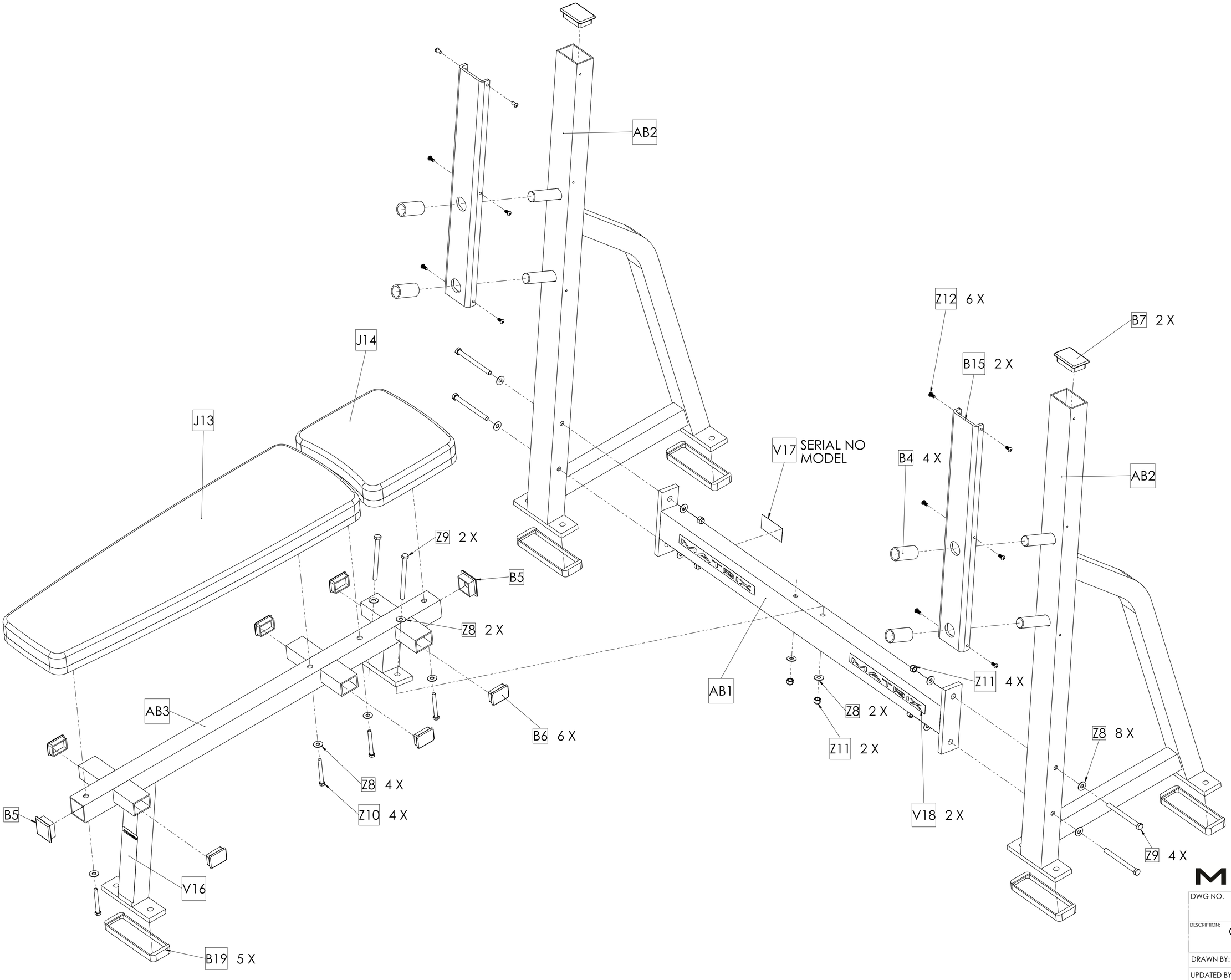

MATRIX

DWG NO.	D78 M SERVICE		
DESCRIPTION:	OLYMPIC FLAT BENCH (Free Weights)		
DRAWN BY:	LMB	DATE:	2013.MAY.06
UPDATED BY:	L.M.B.	DATE:	2015.NOV.03