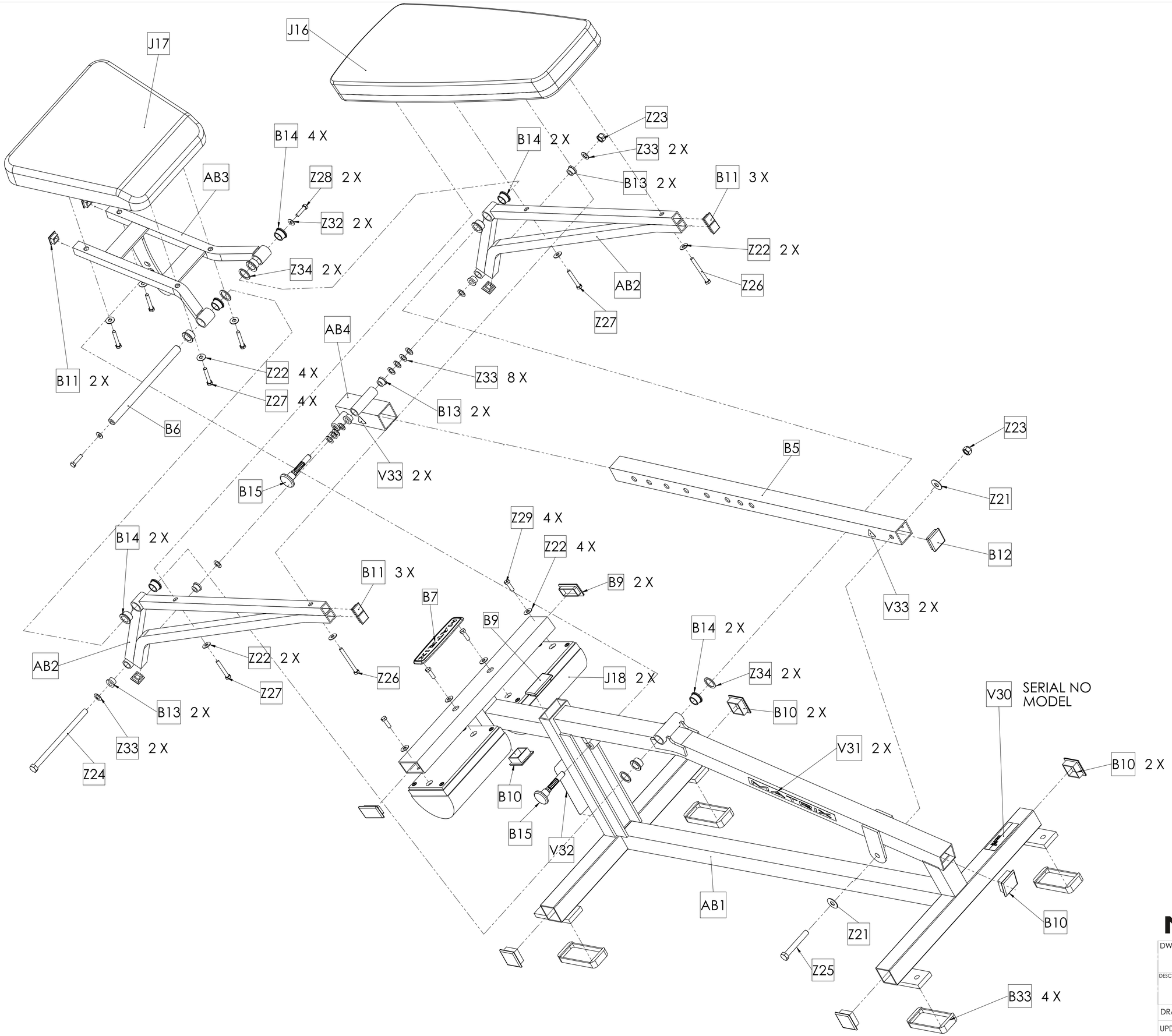

MATRIX

DWG NO.	D86 M SERVICE		
DESCRIPTION:	MULTI-ADJ. BENCH W/DECLINE (Free Weights)		
DRAWN BY:	LMB	DATE:	2013.JUN.07
UPDATED BY:	L.M.B.	DATE:	2016.MAR.08