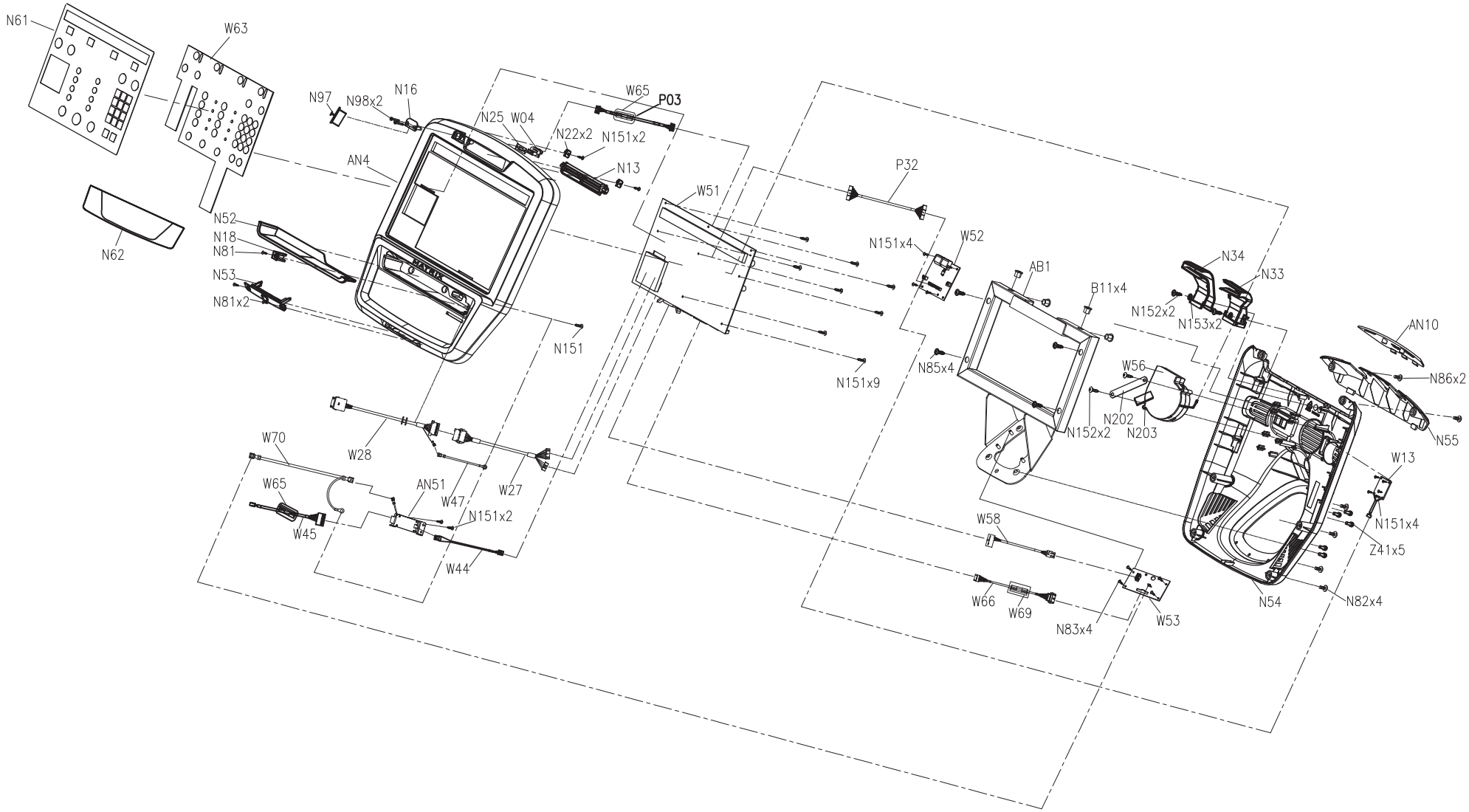DRAWING NO	CS18-AN11		
PART NAME	CONSOLE SET		
PART NO	1000226699	REV	C
APPROVE	GINGO	DATE	20120817