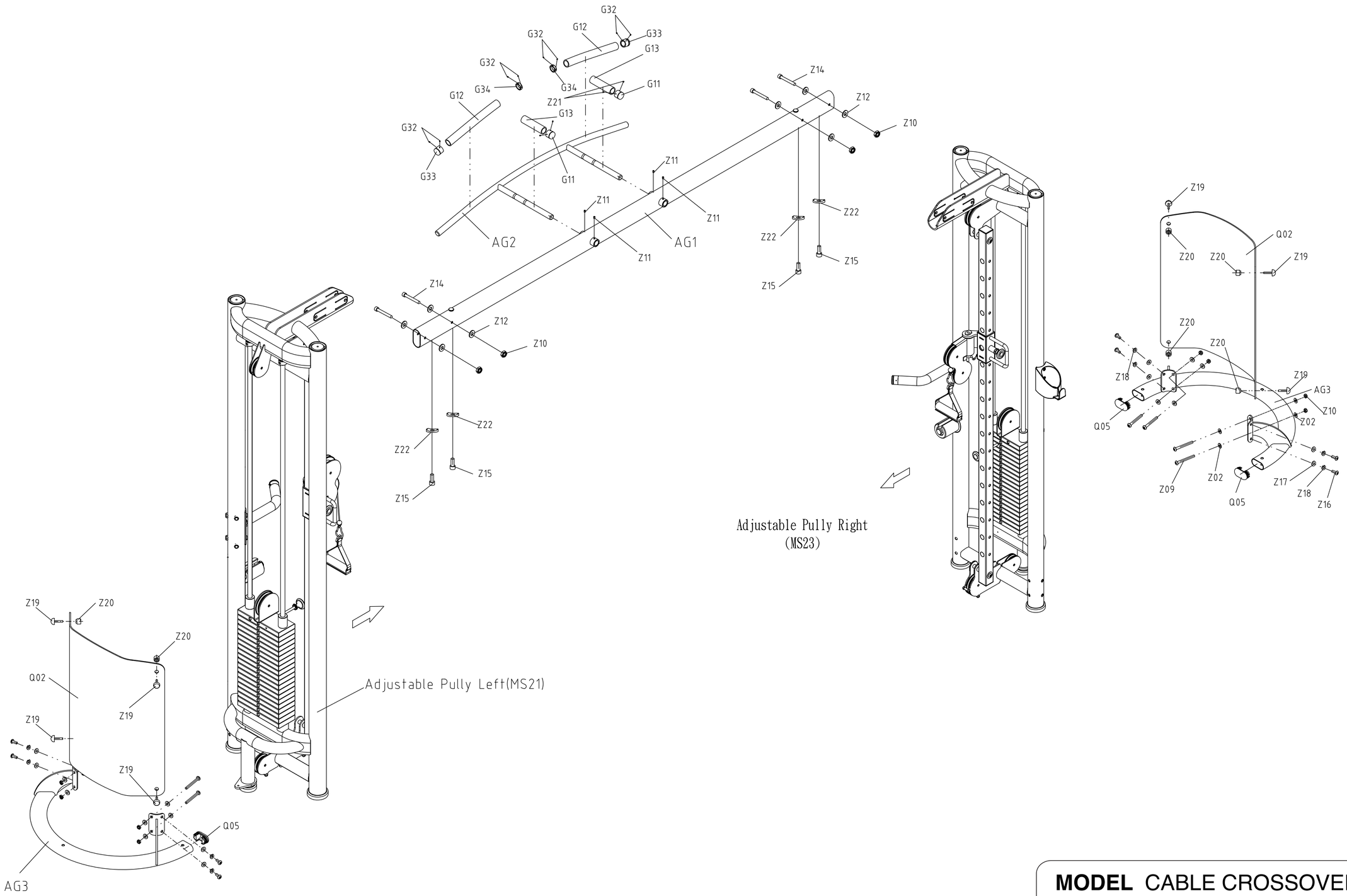

MODEL CABLE CROSSOVER		
MODEL # MX-MS20		**YEAR** 2005
DRAWING # MS20- A25A		MATRIX
SERIAL # G2-MS20		
REV. 0.1	**DATE** 11/06	