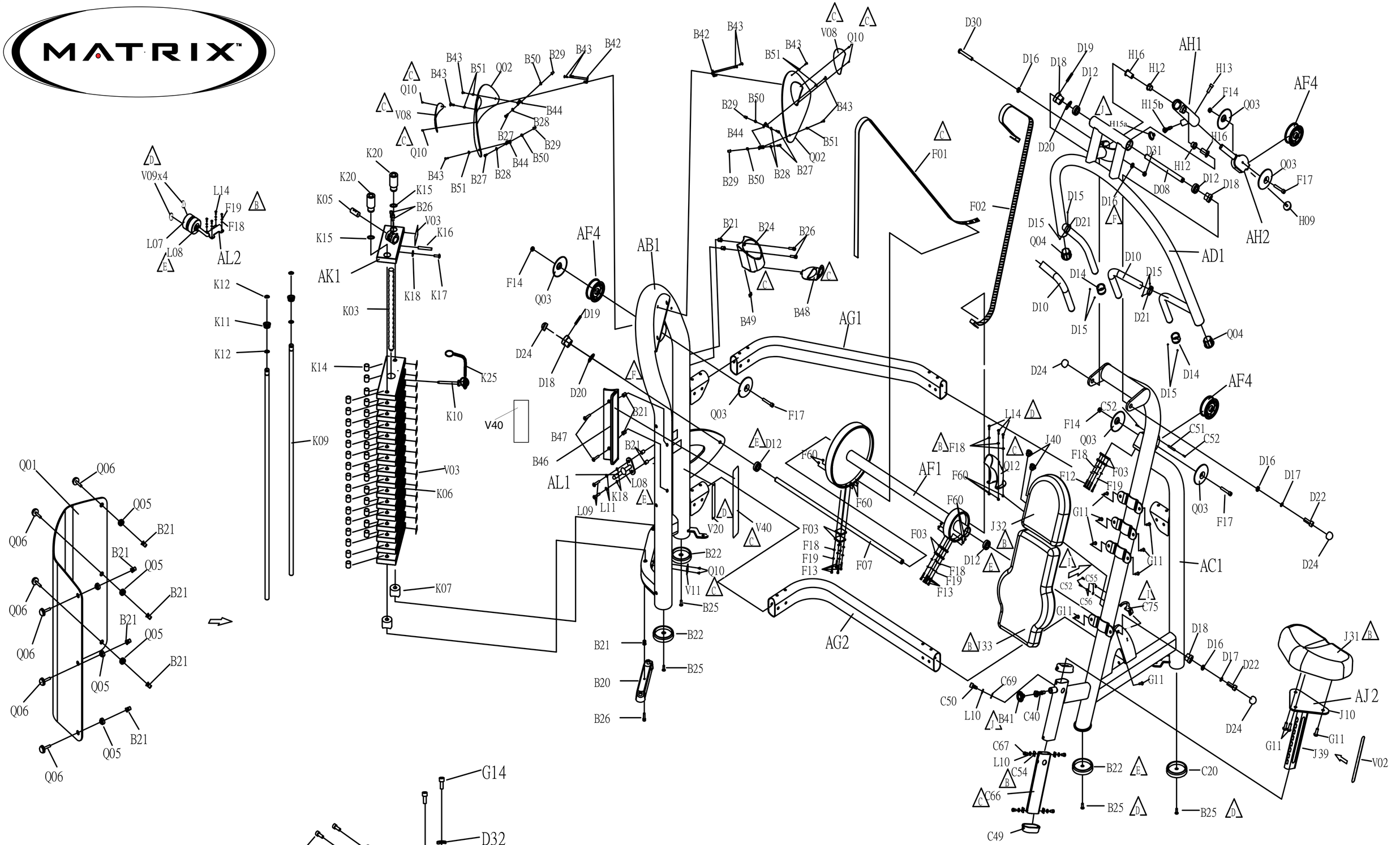

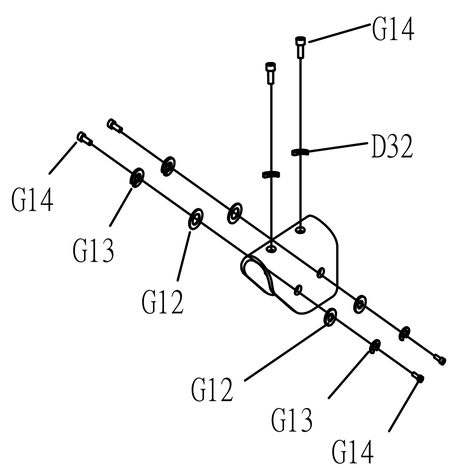

G3S10 Chest Press Rev 2		
Model #: PGM02KM-G3		Year 2008
Drawing #: GM02-A33J		MATRIX
Material #: MGM0280-00		
Rev.: 2.1	Date: 12/18/2007	