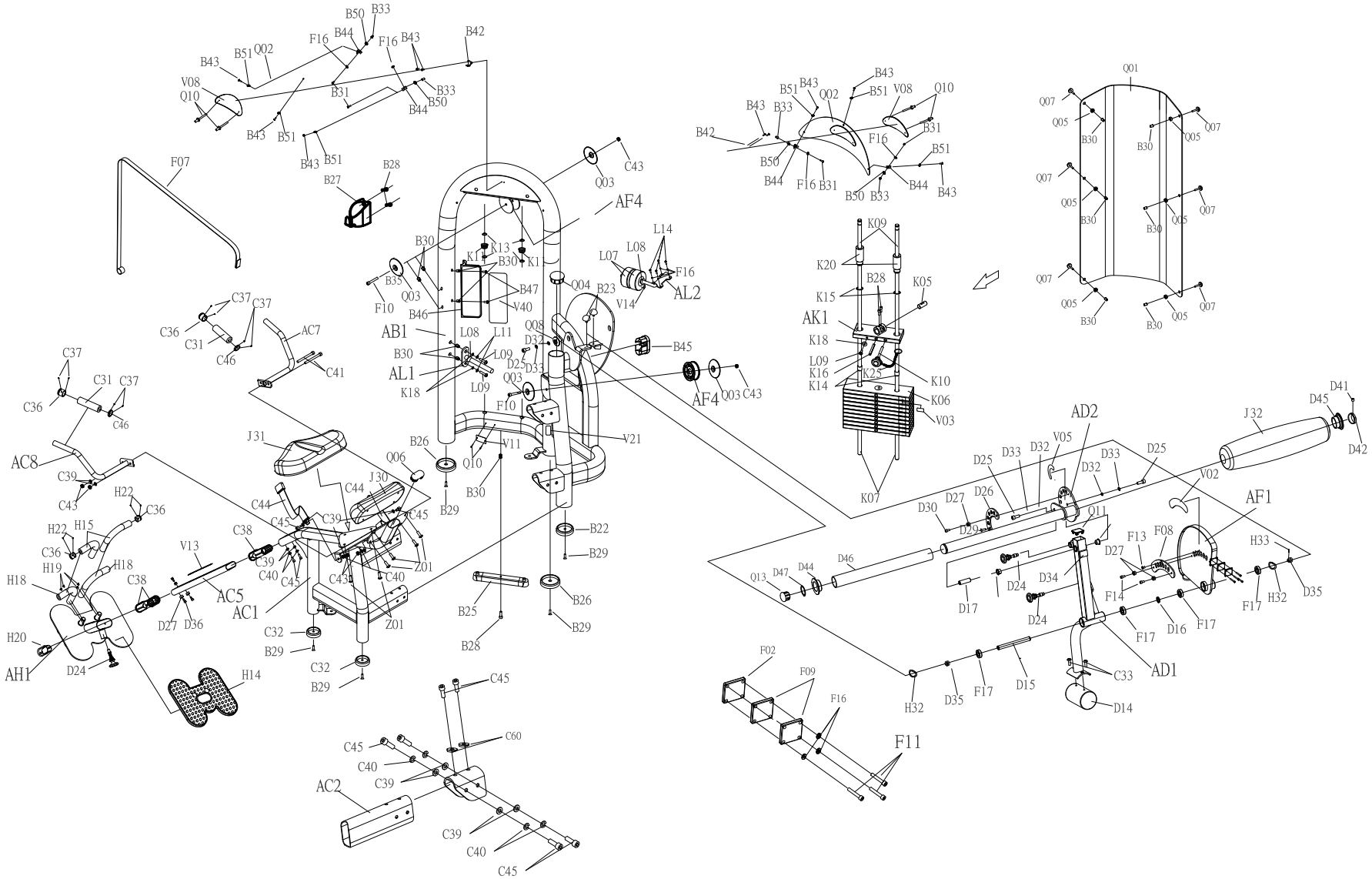DRAWING NO	GM03-A03		
PART NAME	GM03KM-G3		
PART NO	MGM0281-00	REV	A
APPROVE	Ares	DATE	2012/06/08