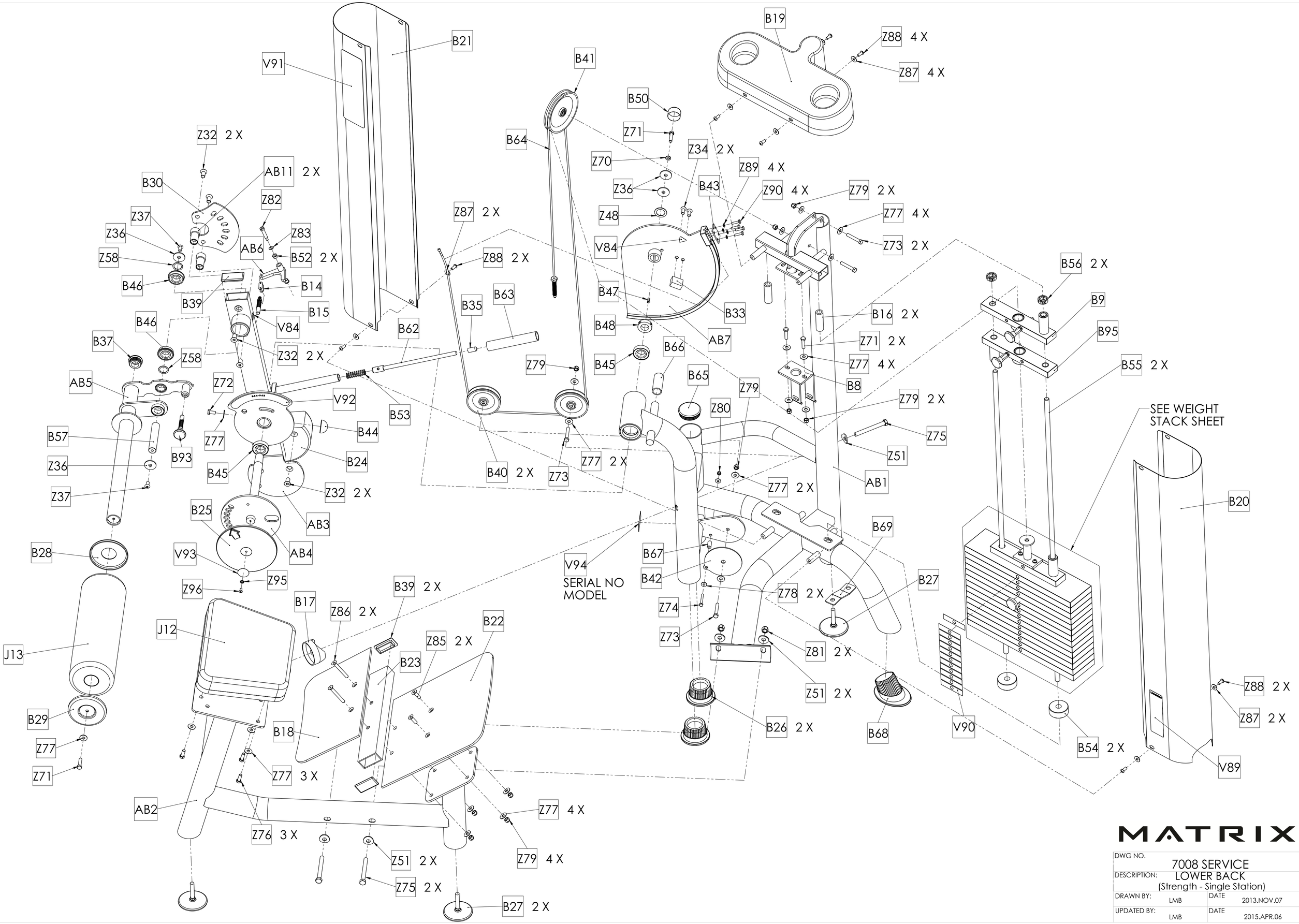
B21
V91
B19
Z88 4 X
Z87 4 X
B41
B50
Z71
B64
Z70
Z34 2 X
Z89 4 X
Z36
B43
Z90 4 X
Z79 2 X
Z48
Z77 4 X
Z73 2 X
V84
Z32 2 X
AB11 2 X
B30
Z82
Z37
Z36
Z83
Z58
AB6
B52 2 X
B46
B14
B39
B15
V84
B46
B37
Z58
Z32 2 X
AB5
Z72
V92
B57
Z77
B93
B44
B24
Z36
B45
Z37
Z32 2 X
B25
AB3
AB4
B28
V93
Z95
Z96
J13
B29
Z77
Z71
Z87 2 X
Z88 2 X
B35
B63
B62
B53
Z79
B40 2 X
Z73
Z77 2 X
B47
B33
B48
AB7
B45
B66
B65
Z79
Z80
Z77 2 X
V94
SERIAL NO
MODEL
B67
B42
Z78 2 X
Z74
Z73
Z81 2 X
Z51 2 X
B26 2 X
B68
B69
B27
B16 2 X
Z71 2 X
Z77 4 X
B8
Z79 2 X
Z75
Z51
AB1
B56 2 X
B9
B95
B55 2 X
SEE WEIGHT
STACK SHEET
B20
V90
B54 2 X
Z88 2 X
Z87 2 X
V89
B39 2 X
B17
Z86 2 X
J12
B22
Z85 2 X
B23
B18
Z77 3 X
AB2
Z76 3 X
Z77 4 X
Z79 4 X
Z51 2 X
Z75 2 X
B27 2 X
MATRIX
DWG NO.
7008 SERVICE
DESCRIPTION:
LOWER BACK
(Strength - Single Station)
DRAWN BY:
LMB
DATE
2013.NOV.07
UPDATED BY:
LMB
DATE
2015.APR.06

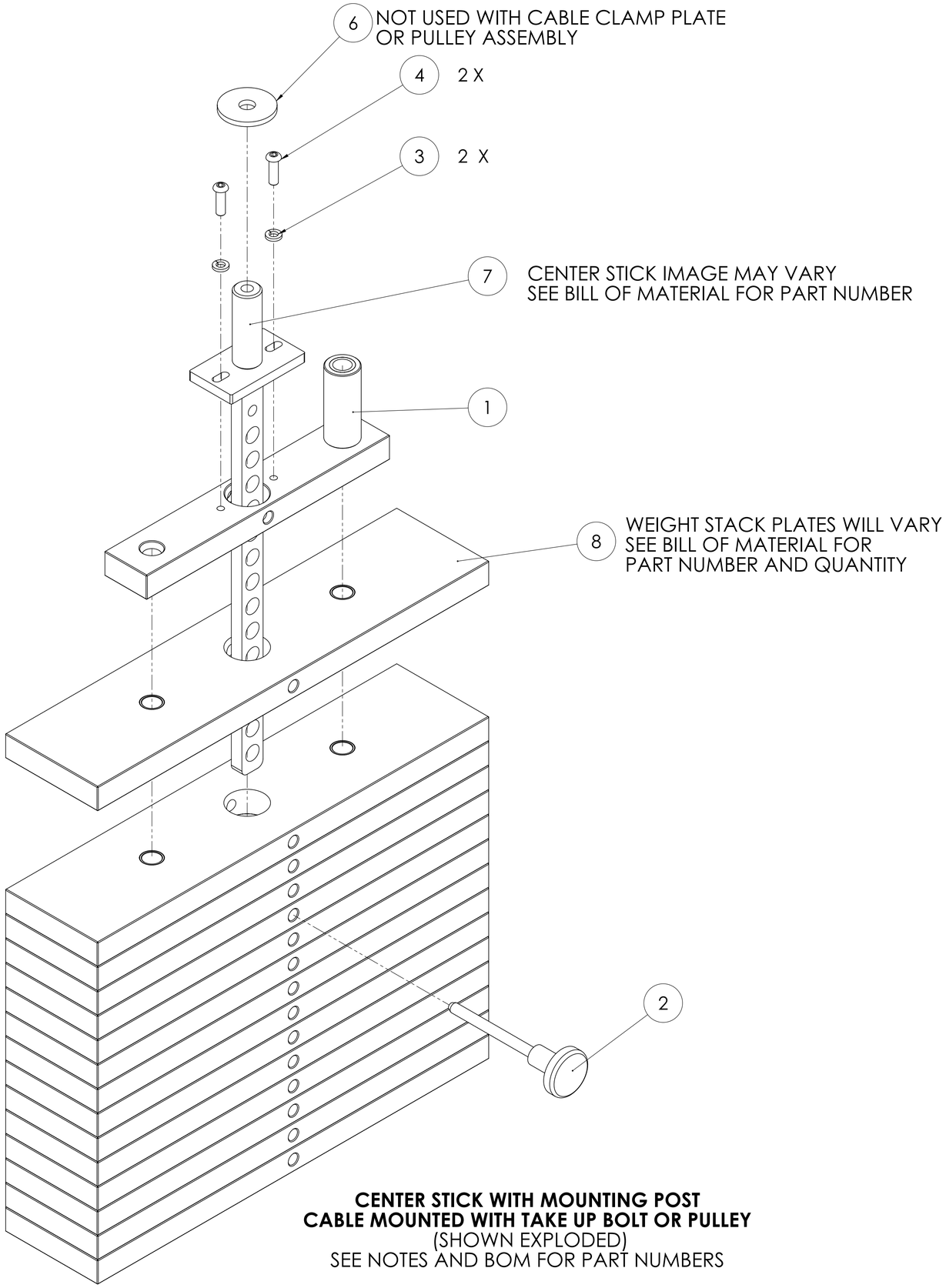

CENTER STICK WITH MOUNTING POST
CABLE MOUNTED WITH TAKE UP BOLT OR PULLEY
(SHOWN EXPLODED)
SEE NOTES AND BOM FOR PART NUMBERS

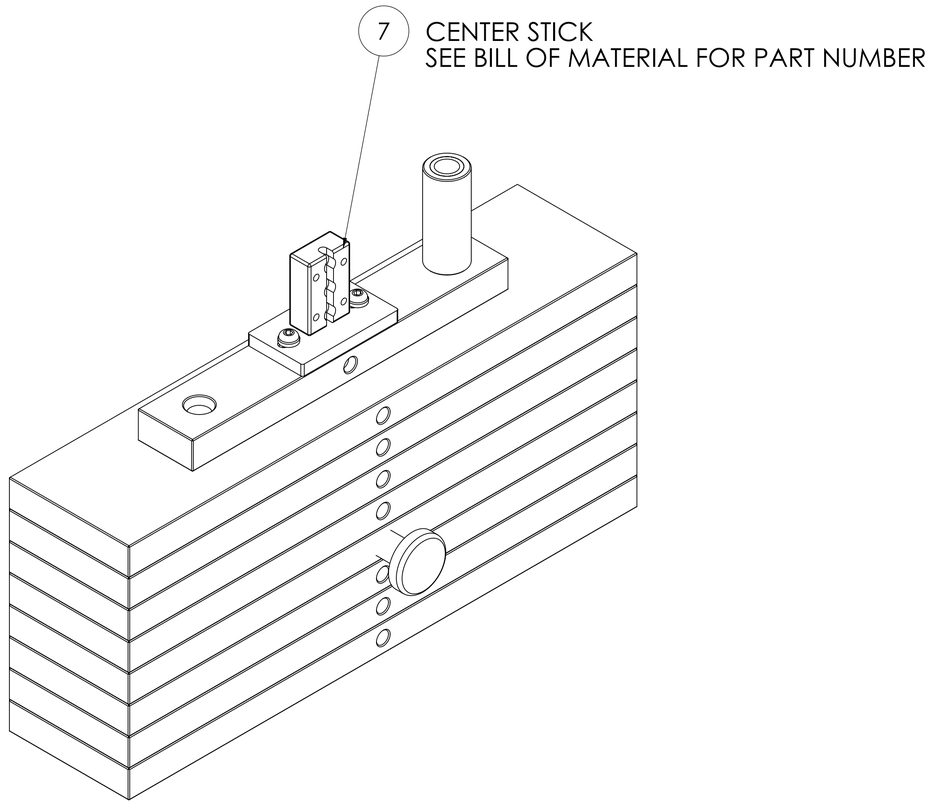

CENTER STICK WITH CLAMP PLATE
SEE NOTES AND BOM FOR PART NUMBERS

MATRIX

DWG NO.	WEIGHT STACK SERVICE		
DESCRIPTION:	WEIGHT STACK/CENTER STICK ASSEMBLY (Take Up Bolt, Pulley & Clamp Style)		
DRAWN BY:	LMB	DATE:	2013.OCT.10
UPDATED BY:	LMB	DATE:	2015.FEB.04