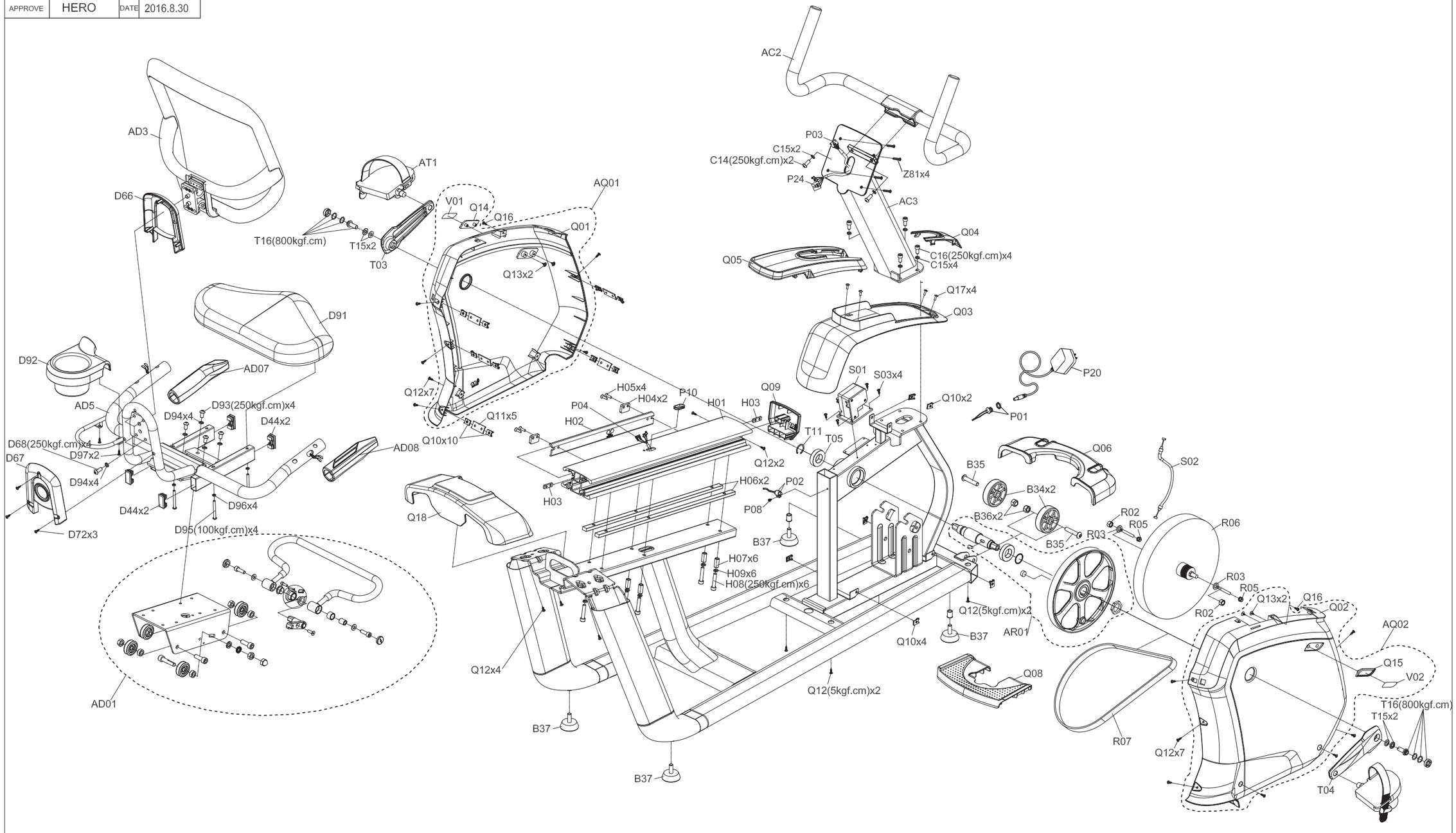DRAWING NO	PRB207-1US-F		
PART NAME	Service Exploded Drawing		
PART NO	MRB0175-00	REV	B
APPROVE	HERO	DATE	2016.8.30